U.S. Department
of Transportation

**National Highway
Traffic Safety
Administration**

400 Seventh Street, S.W.
Washington, D.C. 20590

Dear Crash Data Researchers/Users:

Thank you for choosing crash data from the National Highway Traffic Safety Administration (NHTSA) for your research or other use. The information contained in this motor vehicle crash report is collected, maintained and distributed in accordance with Public Law 89-564. In accordance with this Public Law, NHTSA is required not to release any case information until completion of quality control procedures. These procedures include a review of the case material to extract all names, licenses and registration numbers, non-coded interview material, non-research related researcher comments in the margins, non-factual data, and the production number portion of the vehicle identification number (VIN).

If you requested NHTSA to query its database files in order to identify a specific crash, then that query was made using non-personal descriptors you provided for use in our search. This motor vehicle crash may have been identified from a data search and matches the general, non-personal descriptors you provided, but we cannot confirm that this is the specific crash report you requested.

If you have any questions with regard to the above procedures, please contact the Field Operations Branch, Crash Investigation Division, National Center for Statistics and Analysis at 202-366-4820. Again, please be advised that we cannot confirm that this is the case that you have specifically requested nor can we certify the information to be correct.

*** *** ***

AUTO SAFETY HOTLINE
(800) 424-9393
Wash. D.C. Area 366-0123

Case Vehicle (A): 1999 Volvo
Type: S-80, 4-door sedan
Driver: 34-year-old male
CDC: 12-FDEW-2

Veh. (B): 1997 Dodge
Type: Neon, 4-door sedan
Driver: 25-year-old female
CDC: 99-ØØØØ-Ø

SITUATION

(Slide 1) It was dawn and overcast, and (slide 2) the four-lane divided limited-access asphalt freeway road surface was wet but free of defects. Case vehicle (A) was traveling west at an unknown speed in the left westbound lane. Vehicle (B) was traveling west at an unknown speed in the right westbound lane, just slightly ahead of case vehicle (A). The driver of vehicle (B) attempted to change lanes by moving to the left, but then saw case vehicle (A) and steered to the right to go back into her original travel lane. The driver of vehicle (B) lost control of the vehicle and it rotated counterclockwise 180 degrees and went into the path of case vehicle (A). The front of case vehicle (A) struck the front of vehicle (B) in an offset mode. The drivers of case vehicle (A) and vehicle (B) were transported to a local hospital via ambulance, and both were treated and released the same day.

GENERAL VEHICLE DAMAGE AND ESTIMATED CRASH SEVERITIES

(Slide 3) The direct damage to case vehicle (A) began at the left-front bumper corner and extended 122 cm to the left, resulting in 77 percent vehicle overlap. (Slide 4) The maximum crush was 27 cm to the center-front bumper. (Slide 5) The plastic bumper cover/fascia was pulled away from the metal bumper support, so all measurements were taken at the support.

Using the WinSMASH accident-reconstruction program, a principal direction of force of 10 degrees, and a (slides 6, 7, 8 and 9) crush profile measured for case vehicle (A), the following impact severity was determined:

Vehicle	Variable	Calculated Velocity Change - kph (mph)		
		Total	Longitudinal	Latitudinal
Case vehicle (A)	EBS	32 (14)	-31 (-14)	6 (2)

DESCRIPTION OF DAMAGE TO CASE VEHICLE (A)

Exterior

(Slide 10) In the front, the grille, the left headlight assembly, the hood, and the hood latch, were damaged. The hood latch was damaged and jammed closed, but was pried open by rescue or tow-yard personnel. (Slide 11) The left and center portion of the radiator and upper radiator support were deformed rearward. (Slide 12) The rear edge of the hood was elevated, but it did not contact the undamaged windshield.

On the left side, (slide 13) the fender was crushed rearward, (slides 14 and 15) but there was no change in the wheelbase. On the right side, (slide 16) the fender was slightly deformed, (slide 17) but there was no change in the wheelbase. (Slides 18 and 19) There was no damage to the rear of the vehicle.

Interior

This vehicle was equipped with steering-wheel and passenger frontal-impact airbags, front seat side-impact airbags, front seat seatbelt pre-tensioners, and front seat "AWS" (anti-whiplash seat) rear-impact protection systems. (Slides 20, 21 and 22) Both frontal-impact airbags deployed in this frontal collision. It is believed that the pre-tensioner fired on the driver's belt system, but no physical evidence was present to verify this (e.g. the seatbelt was not locked in an extended position and would retract properly). (Slides 23, 24, 25, 26, 27, and 28) There was no damage to the steering-wheel or the passenger airbag module covers. (Slides 29, 30, 31, and 32) There was no deformation to the steering-wheel rim or spokes. There was no rotation of the steering column. (Slide 33) There was a discoloration or burn on the left steering-wheel spoke. (Slides 34, 35, 36, 37, 38, 39 and 40) There was no interior damage and no intrusion.

OCCUPANT KINEMATICS AND INJURIES

(Slide 41) The 5-ft, 10-in, 160-lb, 34-year-old male driver was wearing the three-point belt and the (slide 42) frontal-impact airbag deployed. (Slide 43) Webbing imprints on the plastic continuous loop and (slide 44) plastic transferred onto the belt webbing are indicators of belt use at the time of the crash. The driver sustained a strain to his right shoulder, probably from contact

with the deploying airbag. (Slides 45 and 46) There was a scuff mark on the plastic knee bolster cover, but no injuries were reported from this witness mark.

The following table and attached drawing (slide 47) summarize the injuries for the driver who was the lone occupant of case vehicle (A).

Occupant: Driver
Restraints: 3-point belt worn (unknown if pretensioner fired); frontal-impact airbag deployed; side-impact airbag did not deploy

Age: 34 years
Stature: 178 cm (5 ft, 10 in)

Sex: Male
Mass: 73 kg (160 lb)

Injury Description	A.I.S.	Injury Source		
		Definite	Probable	Possible
Strain, right shoulder	1		Airbag	
Maximum A.I.S. Level	1			
Injury Severity Score	1			

Duplicate columns 1-8 from the previous card. Module G (9) I (10) Format 0 (11) 2 (12)

GENERAL INFORMATION GI-1

TIME

DATE OF COLLISION

___ ___ / ___ ___ / ___ ___ ___ ___
m m d d y y y y

HOUR OF COLLISION (24 HOUR CLOCK) ___ (21) ___ ___ ___ (24)

LOCATION

STATE: _____

STATE FIPS CODE ___ (25) ___ (26)

AREA

(1) URBAN
(2) RURAL
(9) UNKNOWN

1 (27)

ENVIRONMENTAL CONDITIONS

LIMITED-ACCESS HIGHWAY

(0) NO
(1) YES
(9) UNKNOWN

1 (28)

ROAD, TOTAL TRAFFIC LANES *(FOR CASE VEHICLE)*

(1) 1-LANE
(2) 2-LANES
(3) 3-LANES
(4) 4 OR MORE LANES
(5) DIVIDED, 4 OR MORE LANES
(6) PARKING LOT/DRIVEWAY
(7) OTHER: _____
(9) UNKNOWN

5 (29)

INTERSECTING RD, TOTAL LANES
CHOOSE FROM ABOVE LIST, OR

(8) NOT APPLICABLE

8 (30)

TYPE OF ROAD SURFACE

(1) ASPHALT
(2) CONCRETE
(3) GRAVEL
(4) MORE THAN ONE *(CIRCLE EACH)*
(7) OTHER: _____
(9) UNKNOWN

1 (31)

ROAD DEFECTS

(0) NO
(1) YES
(9) UNKNOWN

0 (32)

ENVIRONMENTAL CONDITIONS

CONSTRUCTION ZONE

(0) NO
(1) YES
(9) UNKNOWN

0 (33)

ROAD ALIGNMENT VERTICAL PLANE

(1) LEVEL
(2) CREST OF HILL
(3) SLOPE *(2%)*
(4) BOTTOM OF HILL
(9) UNKNOWN

1 (34)

ROAD ALIGNMENT HORIZONTAL PLANE

(1) STRAIGHT
(2) CURVE
(3) T - SHAPED
(4) Y - SHAPED
(7) OTHER: _____
(9) UNKNOWN

1 (35)

SURFACE COVERING

(10) DRY

(21) WATER - DAMP
(22) WATER - WET
(23) WATER - PUDDLED
(29) WATER - AMOUNT UNKNOWN

(31) SNOW - LOOSE
(32) SNOW - PACKED
(39) SNOW - CONDITION UNKNOWN

(41) ICE
(51) SLUSH
(61) SPILLED GRAVEL
(71) OTHER: _____
(99) UNKNOWN

2 (36) 2 (37)

VISIBILITY LIMITATION *(FOR CASE VEHICLE)*

(0) NONE
(1) CLOUDY/DARK
(2) FOG
(3) SMOKE
(4) WINDSHIELD CONDITION
(5) GLARE
(6) RAIN
(7) OTHER: _____
(8) ICE/SNOW
(9) UNKNOWN

0 (38)

VISIBILITY OBSTRUCTION *(FOR CASE VEHICLE)*

(0) NONE
(1) BUILDING
(2) SIGN
(3) VEGETATION *(E.G. BUSHES, SHRUBS)*
(4) TREE
(5) HILL OR CURVE IN ROAD
(6) VEHICLE IN TRANSPORT
(7) OTHER: _____
(8) PARKED VEHICLE
(9) UNKNOWN

0 (39)

ENVIRONMENTAL CONDITIONS

SPEED LIMIT

(0) 5-45 km/h ..... 5-25 mph
(1) 46-55 30
(2) 56-60 35
(3) 61-70 40
(4) 71-79 45
(5) 80-85 50
(6) 86-90 55
(7) 91-105 ..... 60 ✓
(8) OVER 105 65
(9) UNKNOWN

7 / 40

PRECIPITATION

(0) NONE
(1) RAIN
(2) SNOW
(3) HAIL
(4) FREEZING RAIN/SLEET
(7) OTHER: _____
(9) UNKNOWN

0 / 41

RATE OF PRECIPITATION

(1) LIGHT/MIST
(2) MODERATE
(3) HEAVY
(8) NOT APPLICABLE
(9) UNKNOWN

8 / 42

TEMPERATURE

(0) BELOW -15° C ..... BELOW 5° F
(1) -15 TO -6 ..... 5 TO 22
(2) -5 TO -1 ..... 23 TO 31
(3) 0 TO 2 ..... 32 TO 36
(4) 3 TO 5 ..... 37 TO 41
(5) 6 TO 15 ..... 42 TO 59
(6) 16 TO 25 ..... 60 TO 77
(7) 26 TO 35 ..... 78 TO 95
(8) OVER 35 ..... OVER 96
(9) UNKNOWN

3 / 43

CROSSWIND

(0) NONE
(1) LIGHT
(2) STRONG
(3) GUSTY & STRONG
(9) UNKNOWN

1 / 44

LIGHT CONDITIONS

(1) DAYLIGHT
(2) DAWN
(3) DUSK
(4) DARK, LIGHTED
(5) DARK, UNLIGHTED
(6) DARK, UNKNOWN IF LIGHTED
(9) UNKNOWN

2 / 45

MECHANICAL MALFUNCTION

WAS THERE MENTION OF A MECHANICAL MALFUNCTION IN CASE VEHICLE

(0) NO
(1) YES
(2) YES, DID NOT CONTRIBUTE TO ACCIDENT
(9) UNKNOWN

0 / 46

THE FOLLOWING SECTION SHOULD BE FILLED OUT IF A MECHANICAL MALFUNCTION IS RECOGNIZED OR SUSPECTED.

CIRCLE ITEMS INVOLVED. SUPPORT ANY ITEMS CIRCLED WITH COMMENTS.

BRAKE SYSTEM	DRIVER CONTROLS
EXHAUST SYSTEM	POWER TRAIN
STEERING SYSTEM	FUEL SYSTEM
SUSPENSION SYSTEM	VISIBILITY ITEMS
ELECTRICAL SYSTEM	TIRES
THROTTLE CONTROLS	UNKNOWN

OTHER: _____

COMMENTS: _____

CRASH DETAILS

CASE VEHICLE AND OBJECT

(0) NO
(1) YES
(9) UNKNOWN

0 (47)

CASE VEHICLE ROLLOVER

(0) NO ROLLOVER
(1) YES, FIRST EVENT
(2) YES, SUBSEQUENT EVENT
(3) YES, SEQUENCE UNKNOWN
(9) UNKNOWN

0 (48)

CASE VEHICLE RAN OFF ROADWAY
(BEFORE FIRST IMPACT)

(0) NO
(1) YES
(9) UNKNOWN

0 (49)

MOVING CASE VEHICLE AND CONTACTED MOVING VEHICLE

(0) NO
(1) YES
(9) UNKNOWN

1 (50)

CASE VEHICLE AND CONTACTED STOPPED VEHICLE

(0) NO
(1) YES
(9) UNKNOWN

0 (51)

STOPPED CASE VEHICLE AND CONTACTED VEHICLE

(0) NO
(1) YES
(9) UNKNOWN

0 (52)

TOTAL NUMBER OF VEHICLES CONTACTED BY CASE VEHICLE IN CRASH

(8) 8 OR MORE
(9) UNKNOWN

1 (53)

ANY FIRE IN THIS CRASH
(NOT JUST CASE VEHICLE)

(0) NO
(1) YES
(9) UNKNOWN

0 (54)

HIGHEST POLICE INJURY SEVERITY CODE IN CRASH
(NOT JUST CASE VEHICLE)

(0) O - NO INJURY
(1) C - POSSIBLE INJURY
(2) B - NON-INCAPACITATING INJURY
(3) A - INCAPACITATING INJURY
(4) K - FATAL
(5) INJURED, SEVERITY UNKNOWN
(6) DIED PRIOR TO ACCIDENT
(7) NON-FATAL INJURY SEVERITY UNKNOWN
(9) UNKNOWN

1 (55)

DRIVER IMPAIRMENT

DRIVER ALCOHOL INVOLVEMENT
(CASE VEHICLE)

(0) NONE
(1) YES
(9) UNKNOWN/NOT REPORTED/ NO DRIVER

0 (56)

DRIVER ALCOHOL BAC
(CASE VEHICLE)

(80) NO TEST
(90) CHEMICAL TESTS, NO RESULTS
(95) AUTOPSY, NO RESULTS
(99) UNKNOWN

8 (57) 0 (58)

WAS THERE MENTION OF DRIVER IMPAIRMENT FOR CASE VEHICLE?

(0) NO
(1) YES
(9) UNKNOWN

0 (59)

LIST IMPAIRMENTS MENTIONED:

_____

_____

_____

POST - CRASH DETAIL

MANNER CASE VEHICLE LEFT SCENE

(1) DRIVEN
(2) TOWED DUE TO DAMAGE
(3) TOWED, NOT DUE TO DAMAGE
(4) TOWED, REASON UNKNOWN
(9) UNKNOWN

2 (60)

Accident Schematic

ACCIDENT DESCRIPTION: Case vehicle (A) and vehicle (B) were traveling west, with vehicle (B) in the right lane and case vehicle (A) in the left lane. Vehicle (B) attempted to change lanes but the driver saw case vehicle (A) and steered to the right. Vehicle (B) rotated 180 degrees, went into the path of case vehicle (A). The front of case vehicle (A) struck the front of vehicle (B) in a offset mode.

CASE VEHICLE (A): 1999 Volvo S-80

OTHER VEHICLE (B): 1997 Dodge Neon

THIRD VEHICLE (C):

NORTH

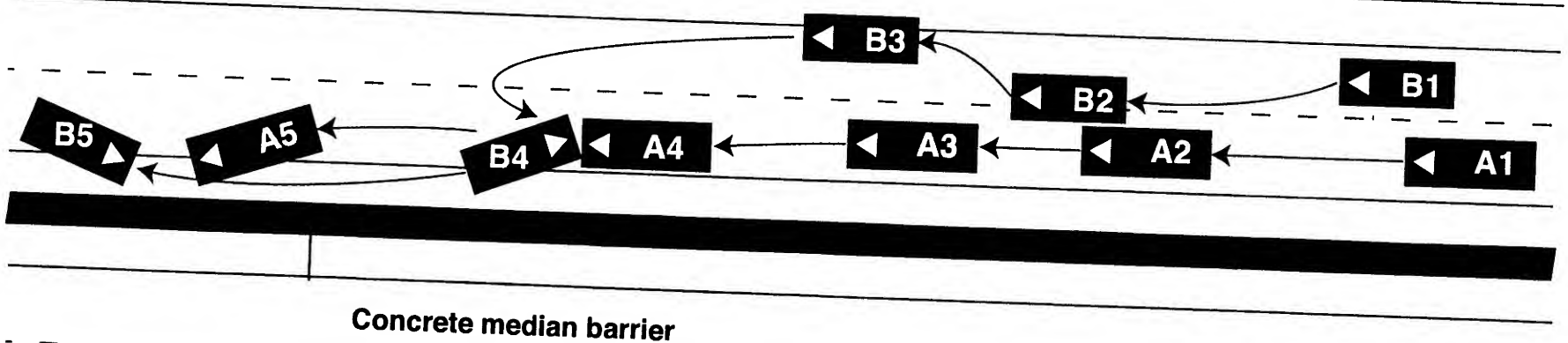

Duplicate columns 1-8 from the previous card. Module O (9) V (10) Format 0 (11) 4 (12)

OTHER VEHICLE OV-1

MAKE: Dodge

MODEL: Neon, 4-door sedan

CARGO:

VIN 3 B 3 E 5 4 7 C 5 V T [redacted] (13–29)

MANUFAC/BODY CODE 9 4 6 2 7 (30–34)

MAKE/MODEL CODE 0 7 4 6 (38)

MODEL YEAR 1 9 9 7 (39–42)

VEHICLE MASS *(kg)* 0 0 1 1 7 4 (43–48)

IF SEPARATE REPORT WAS MADE, GIVE VEHICLE NUMBER 0

NUMBER OF OCCUPANTS *(ENTER 9'S IF UNKNOWN)* 0 1 (51)

TRAVELING SPEED *(km/h)* 9 9 9 (54)

(000) PARKED OR STOPPED
(995) JUST STARTING UP
(996) BACKING UP
(997) SPEED NOT EXCESSIVE *(BUT UNKNOWN)*
(998) SPEED EXCESSIVE *(BUT UNKNOWN)*
(999) UNKNOWN

HIGHEST POLICE INJURY SEVERITY CODE FOR THIS VEHICLE 1 (55)

(0) O - NO INJURY
(1) C - POSSIBLE INJURY
(2) B - NON-INCAPACITATING INJURY
(3) A - INCAPACITATING INJURY
(4) K - FATAL
(5) INJURED, SEVERITY UNKNOWN
(6) DIED PRIOR TO ACCIDENT
(7) NON-FATAL INJURY SEVERITY UNKNOWN
(8) UNOCCUPIED VEHICLE (NOT APPLICABLE)
(9) UNKNOWN

VEHICLE TYPE 2 7 (56 57)

PASSENGER VEHICLE
(02) LARGE
(03) LIMOUSINE
(17) PICKUP CAR
(20) UNKNOWN PASSENGER VEHICLE BODY
(24) SUB-MINI
(25) MINI
(26) SUB-COMPACT
(27) COMPACT
(28) INTERMEDIATE
(29) FULL

MULTIPURPOSE PASSENGER VEHICLE
(14) SMALL UTILITY *(WHEELBASE LESS THAN 107", E.G. JEEP, BRONCO)*
(15) LARGE UTILITY *(WHEELBASE MORE THAN 107", E.G. PANEL TRUCK, SUBURBAN)*
(16) PICKUP TRUCK WITH CANOPY/SHELL COVER
(17) PICKUP CAR WITH CANOPY/SHELL COVER
(21) MOTOR HOME
(22) PICKUP TRUCK WITH SLIDE-IN CAMPER
(23) PICKUP CAR WITH SLIDE-IN CAMPER
(31) CHASSIS-MOUNTED CAMPER

TRUCK
(11) VAN
(12) PICKUP TRUCK
(13) UNKNOWN LIGHT TRUCK
(15) LARGE UTILITY (E.G. PANEL TRUCK, SUBURBAN)
(16) PICKUP TRUCK WITH CANOPY/SHELL COVER
(22) PICKUP TRUCK WITH SLIDE-IN CAMPER
(30) UNKNOWN TRUCK TYPE
(31) CHASSIS-MOUNTED CAMPER
(33) DELIVERY VAN (WALK-IN)
(34) STRAIGHT TRUCK
(35) TRUCK-TRACTOR (BOBTAIL)
(36) CHASSIS-CAB
(37) UNKNOWN HEAVY TRUCK
(38) TRACTOR & SEMI-TRAILER (SEMI)
(39) TRUCK (OR SEMI) & FULL TRAILER(S)

BUS
(40) UNKNOWN BUS TYPE
(41) SCHOOL BUS
(42) INTERCITY BUS (BETWEEN CITIES)
(43) TRANSIT BUS (INTRACITY)
(44) STREETCAR (ON TRACKS)

(68) TRAIN (CARS)
(69) LOCOMOTIVE (ENGINE, SWITCHER)

(99) UNKNOWN

WHEELBASE *(cm)* 2 6 4 (58 59 60)
(999) UNKNOWN

Duplicate columns 1-8 from the previous card. Module O V (9, 10) Format 0 2 (11, 12)

OTHER VEHICLE OV-2

ORIGINAL SPECIFICATIONS

Wheelbase	264 cm	Front Overhang	086 cm (22–24)
Curb Weight	1174 kg	Rear Overhang	086 cm (25–27)
Average Track Width	146 cm (13–15)	Undeformed End Width (UEW)	140 cm (28–30)
Overall Length	436 cm (16–18)	Engine Displacement	2.0 L (31–32)
Overall Width (OAW)	171 cm (19–21)	Engine: # of Cylinders	04 (33–34)

VEHICLE DAMAGE

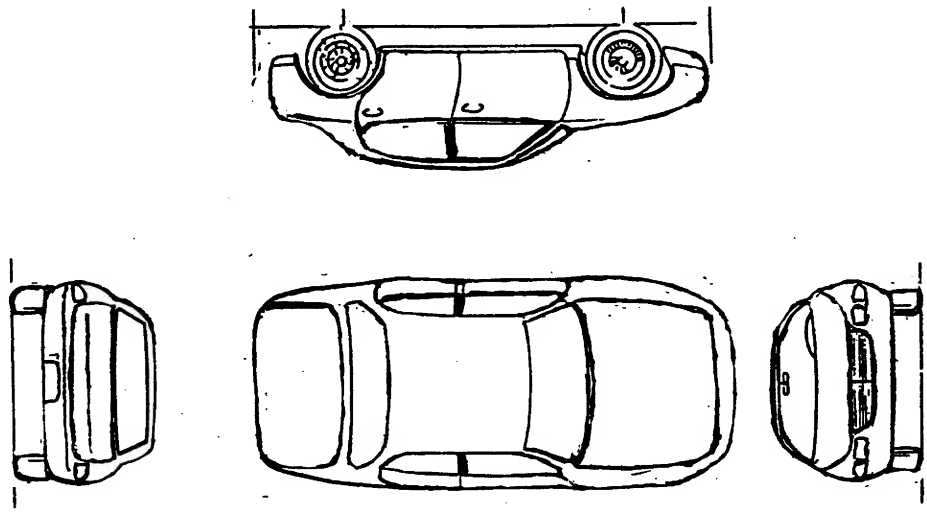

This vehicle was not available for inspection.

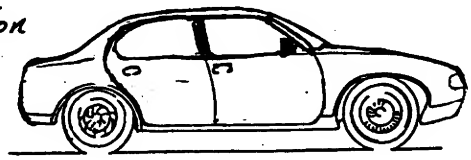

FRONTAL CRASH OVERLAP

Round up for .5. 98 = 98% or more
Enter % overlap or "99" for missing or N/A.

Direct Damage Length (DDL) 999 cm (35–37)

Front-End Overlap (Percent) = $\frac{DDL}{UEW}$ _____ 99 % (38–39)

Vehicle Overlap (Percent) = $\frac{DDL + 1/2\ (OAW - UEW)}{OAW}$ _____ 99 % (40–41)

Duplicate columns 1-8 from the previous card. Module V (9) D (10) Format 0 (11) 4 (12)

VEHICLE DESCRIPTION VD-1

MAKE: Volvo

MODEL: 580 T-6, 4-door sedan

CARGO:

VIN (13) Y V 1 T S 9 0 D 4 X 1 [redacted] (29)

MANUFAC/BODY CODE (30–34) 9 5 2 2 8

MAKE/MODEL CODE (38) 2 0 5 2

MODEL YEAR (39–42) 1 9 9 9

VEHICLE MASS *(kg)* (43–48) 0 0 1 6 8 0

ODOMETER *(km)*
(ENTER 9'S IF UNKNOWN)
(ENTER 8'S IF ELECTRONIC) (49–54) 0 3 3 9 3 2

NUMBER OF OCCUPANTS
(ENTER 9'S IF UNKNOWN) (56) 0 1

TRAVELING SPEED *(km/h)* (59) 9 9 9

(000) PARKED OR STOPPED
(995) JUST STARTING UP
(996) BACKING UP
(997) SPEED NOT EXCESSIVE *(BUT UNKNOWN)*
(998) SPEED EXCESSIVE *(BUT UNKNOWN)*
(999) UNKNOWN

VEHICLE TYPE

(60–61) 1 4

PASSENGER VEHICLE
- (11) 2-DOOR HARDTOP *(NO UPPER B-PILLAR)*
- (12) 2-DOOR SEDAN OR COUPE *(ANY UPPER B-PILLAR)*
- (13) 4-DOOR HARDTOP
- (14) 4-DOOR SEDAN
- (15) STATION WAGON
- (16) CONVERTIBLE
- (18) OTHER PASS. VEH. : _____
- (19) PASSENGER VEHICLE, TYPE UNKNOWN

MULTIPURPOSE PASSENGER VEHICLE
- (21) SMALL UTILITY *(E.G. JEEP, SCOUT, BRONCO)*
- (22) LARGE UTILITY *(E.G. PANEL TRUCK, SUBURBAN)*
- (23) VAN, SIZE UNKNOWN
- (24) VAN, SMALL *(MINI)*
- (25) VAN, LARGE
- (29) MPV, TYPE UNKNOWN
- (30) MOTOR HOME

TRUCK
- (31) PICKUP TRUCK, UNKNOWN
- (32) PICKUP TRUCK, SMALL *(DOWNSIZED)*
- (33) PICKUP TRUCK, LARGE

(99) UNKNOWN

STOLEN VEHICLE

(62) 8

- (0) NO
- (1) YES
- (8) NOT COLLECTED
- (9) UNKNOWN

BODY STRUCTURE

(63) 2

- (1) BODY & FRAME
- (2) UNITIZED
- (3) INTEGRAL-STUB FRAME
- (4) BODY & PLATFORM FRAME *(E.G. VW BUG)*
- (5) PARTIALLY UNITIZED
- (7) OTHER: _____
- (9) UNKNOWN

TRANSMISSION

(64) 1

- (0) NONE
- (1) AUTOMATIC
- (2) MANUAL
- (9) UNKNOWN

LOCATION OF TRANSMISSION SELECTOR LEVER

(65) 3

- (1) FLOOR
- (2) CONSOLE
- (3) COLUMN
- (7) OTHER: _____
- (9) UNKNOWN

STEERING

(66) 1

- (1) POWER
- (2) MANUAL
- (9) UNKNOWN

BRAKES

(67) 1

- (1) POWER
- (2) MANUAL
- (9) UNKNOWN

TYPE OF BRAKES

(1) DRUM, ALL WHEELS
(2) DISC, FRONT WHEELS
(3) DISC, ALL WHEELS
(9) UNKNOWN

3 (68)

BRAKE ANTI-LOCK DEVICE

(0) NONE INSTALLED
(1) TWO-WHEEL
(2) FOUR-WHEEL
(7) EQUIPPED, UNKNOWN WHEELS
(9) UNKNOWN

2 (69)

AIR CONDITIONING IN VEHICLE

(0) NO
(1) YES
(8) NOT COLLECTED
(9) UNKNOWN

8 (70)

TYPE OF DRIVE

(1) REAR WHEEL
(2) FRONT WHEEL
(3) FOUR WHEEL
(4) ALL WHEEL DRIVE
(9) UNKNOWN

2 (71)

DUAL REAR WHEELS

(0) NO
(1) YES
(9) UNKNOWN

0 (72)

ORIGINAL TYPE OF RESTRAINT SYSTEM

(1) ACTIVE BELT
(2) PASSIVE BELT
(3) AIRBAG
(4) KNEE BOLSTERS
(7) OTHER: _____
(8) NOT APPLICABLE *(NOT EQUIPPED)*
(9) UNKNOWN

3 (73)

EQUIPPED WITH ROLL BAR

(0) NO
(1) YES
(9) UNKNOWN

0 (74)

TYPE OF ROOF

(0) NONE
(1) SOLID
(2) T-TOP CLOSED
(3) T-TOP OPEN
(4) SUN ROOF CLOSED
(5) SUN ROOF OPEN
(6) CONVERTIBLE CLOSED
(7) CONVERTIBLE OPEN
(8) OTHER: _____
(9) UNKNOWN

4 (75)

WHEELBASE *(cm)*

(999) Unknown

279 (76 77 78)

PLASTIC ANTI-LACERATIVE INNER LAYER GLASS EQUIPPED

(0) NONE
(1) WINDSHIELD
(2) WINDSHIELD AND SIDE
(7) OTHER
(9) UNKNOWN

0 (79)

FIELD INVESTIGATOR INSTRUCTIONS:

1. *INDICATE CRUSHED AREAS BY OUT-LINING NEW PERIMETER OF VEHICLE AND SHADING THE DAMAGED AREAS ON THE LARGE SKETCH ON PAGE VD-3. USE AS MANY SKETCHES AS NECESSARY TO COMPLETELY DESCRIBE THE DAMAGE.*
2. *ENTER THE DIMENSIONS ON THE SKETCH(ES) MEASURED TO THE POINT OF MAXIMUM PENETRATION BY THE OBJECT(S) CONTACTED. USE THE EXAMPLES BELOW AS A GUIDE.*
3. *ENTER THE THREE DIMENSIONS TO THE CENTER OF THE WHEELS (WHEELBASE, FRONT AND REAR OVERHANGS) ON BOTH SIDES OF THE CAR.*
4. *ADD OTHER DIMENSIONS AS NECESSARY TO COMPLETELY DESCRIBE THE DAMAGE.*

EXAMPLES:

FRONT OR REAR

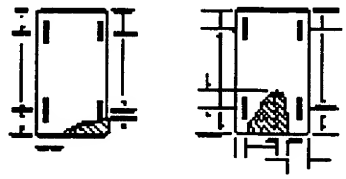

SIDE

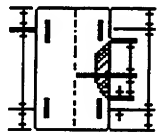

ROOF (REFERENCE TO TOP OF DOOR SILL OR WINDOW SILL)

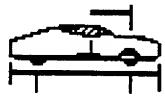

Duplicate columns 1-8 from the previous card. Module V (9) D (10) Format 0 (11) 2 (12)

VEHICLE DESCRIPTION VD-3

ORIGINAL SPECIFICATIONS

CANADIAN VEH. SPEC + HTTP://NEW.VOLVOCARS.COM

Wheelbase	279 cm	Front Overhang	098 (22–24) cm
Curb Weight	1680 kg	Rear Overhang	107 (25–27) cm
Average Track Width	157 (13–15) cm	Undeformed End Width (UEW)	146 (28–30) cm
Overall Length	482 (16–18) cm	Engine Displacement	2.8 (31–32) L
Overall Width (OAW)	183 (19–21) cm	Engine: # of Cylinders	06 (33–34)

VEHICLE DAMAGE

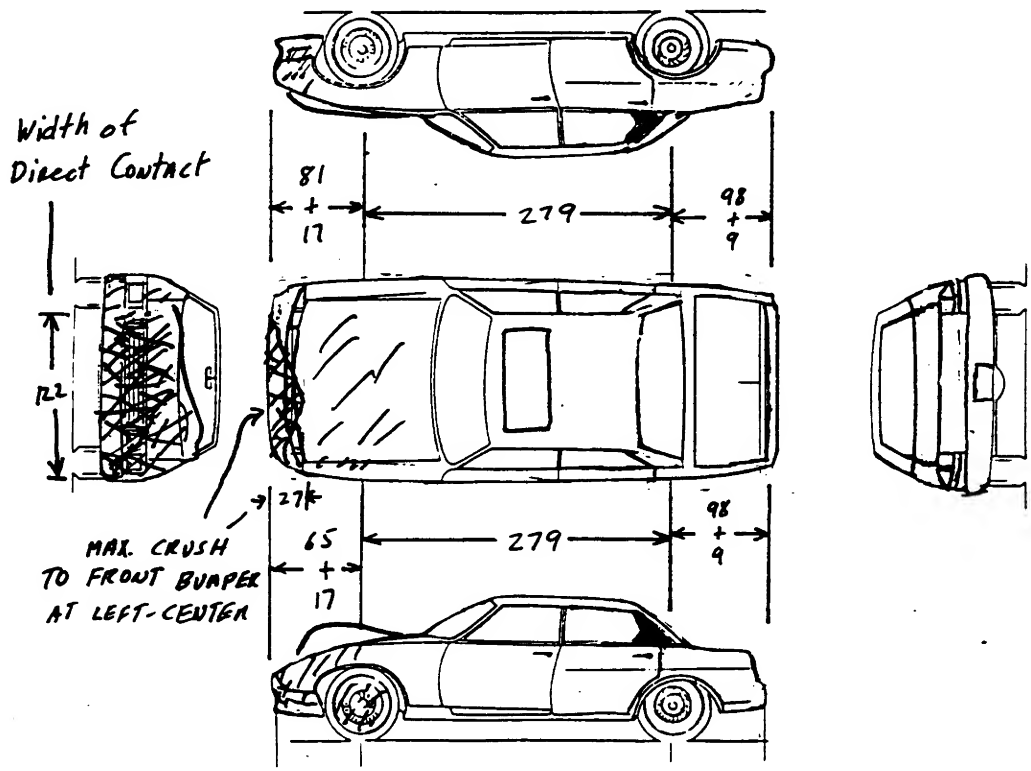

FRONTAL CRASH OVERLAP

Round up for .5. 98 = 98% or more
Enter % overlap or "99" for missing or N/A.

Direct Damage Length (DDL) 122 (35–37) cm

Front-End Overlap (Percent) = $\frac{\text{DDL}}{\text{UEW}}$ _____ 84 (38–39) %

Vehicle Overlap (Percent) = $\frac{\text{DDL} + 1/2\,(\text{OAW} - \text{UEW})}{\text{OAW}}$ _____ 77 (40–41) %

Duplicate columns 1-8 from the previous card. Module D (9) A (10) Format 0 (11) 2 (12)

DAMAGE DA-1

PRIMARY

	CASE VEHICLE PRIMARY CDC	CONTACTED VEHICLE ASSOCIATED CDC
EVENT NUMBER	1 (13)	
IMPACT SPEED *(km/h)*	9 9 9 (14 15 16)	9 9 9 (35 36 37)
ESTIMATED BY	1 (17)	1 (38)
CRUSH *(cm)*	0 2 7 (18 19 20)	9 9 9 (39 40 41)
CDC #1	1 2 - F D E W - 2 (21 – 27)	9 9 - 0 0 0 0 - 0 (42 – 48)
CDC #2	9 8 - 0 0 0 0 - 0 (28 – 34)	9 9 - 0 0 0 0 - 0 (49 – 55)

Duplicate columns 1-8 from the previous card. Module D (9) A (10) Format 0 (11) 3 (12)

SECONDARY

	CASE VEHICLE SECONDARY CDC	CONTACTED VEHICLE ASSOCIATED CDC
EVENT NUMBER	8 (13)	
IMPACT SPEED *(km/h)*	___ (14 15 16)	___ (35 36 37)
ESTIMATED BY	___ (17)	___ (38)
CRUSH *(cm)*	___ (18 19 20)	___ (39 40 41)
CDC #1	___ - ___ (21 – 27)	___ - ___ (42 – 48)
CDC #2	___ - ___ (28 – 34)	___ - ___ (49 – 55)

CODES

EVENT NUMBER

(8) NOT APPLICABLE
(9) UNKNOWN

IMPACT SPEED

(998) NOT APPLICABLE
(999) UNKNOWN

IMPACT SPEED ESTIMATOR

(1) INVESTIGATOR
(2) DRIVER
(3) POLICE
(4) "CRASH" PROGRAM
(5) OTHER COMPUTER PROGRAM SPECIFY: _____
(7) OTHER: _____
(8) NOT APPLICABLE *(NO VEHICLE/NO IMPACT)*

CRUSH

(998) NOT APPLICABLE *(NO VEHICLE/DAMAGE)*
(999) UNKNOWN

CDC

(9800000) NOT APPLICABLE
(9900000) UNKNOWN

Duplicate columns 1-8 from the previous card. Module D (9) A (10) Format 0 (11) 1 (12)

DAMAGE DA-2

MAXIMUM SHEET METAL CRUSH

(cm) (999) UNKNOWN

FRONT	0 2 7 (13–15)	RIGHT SIDE	0 0 0 (16–18)
REAR	0 0 0 (19–21)	LEFT SIDE	0 0 0 (22–24)
ROOF	0 0 0 (25–27)	OTHER	0 0 0 (28–30)

CHRONOLOGICAL SEQUENCE OF DAMAGE/INJURY PRODUCING CRASH EVENTS FOR CASE VEHICLE

NOTE: IF CHRONOLOGICAL ORDER IS UNKNOWN, EVENT ORDER IS OPTIONAL.

DO YOU KNOW THIS TABLE TO BE IN CHRONOLOGICAL ORDER? 1 (31)

(0) NO
(1) YES

EVENT NUMBER	IMPACT LOCATION (1) ON ROADWAY (2) SHOULDER/MEDIAN/GORE (3) ON ROADSIDE (4) OUTSIDE ROADSIDE RIGHT-OF-WAY (5) OTHER (6) OFF ROADWAY, LOC. UNK. (9) UNKNOWN	IMPACT CONFIGURATION *FOR CODES, SEE TABLE ON PAGE DA-3.*	OBJECT/VEHICLE CONTACTED *FOR CODES, SEE TABLE ON PAGE DA-4.*
# 1	1 (32)	1 1 (34)	2 7 (36)
#2	(37)	(39)	(41)
#3	(42)	(44)	(46)
#4	(47)	(49)	(51)
#5	(52)	(54)	(56)
#6	(57)	(59)	(61)
#7	(62)	(64)	(66)

CODES FOR IMPACT CONFIGURATION

FRONT OF CASE VEHICLE

(11) AND FRONT OF CONTACTED VEHICLE
(13) AND SIDE OF CONTACTED VEHICLE
(14) AND REAR OF CONTACTED VEHICLE
(16) ENDSWIPED BY CONTACTED VEHICLE
(17) AND OBJECT
(19) AND UNKNOWN OTHER VEHICLE CONFIGURATION

LEFT SIDE OF CASE VEHICLE

(21) AND FRONT OF CONTACTED VEHICLE *(TYPE T)*
(22) AND FRONT OF CONTACTED VEHICLE *(TYPE L)*
(23) AND SIDE OF CONTACTED VEHICLE *(NOT SIDESWIPE)*
(24) AND REAR OF CONTACTED VEHICLE *(TYPE T)*
(25) AND REAR OF CONTACTED VEHICLE *(TYPE L)*
(26) SIDESWIPED BY CONTACTED VEHICLE
(27) AND OBJECT
(29) AND UNKNOWN OTHER VEHICLE CONFIGURATION

REAR OF CASE VEHICLE

(31) AND FRONT OF CONTACTED VEHICLE
(33) AND SIDE OF CONTACTED VEHICLE
(34) AND REAR OF CONTACTED VEHICLE
(36) ENDSWIPED BY CONTACTED VEHICLE
(37) AND OBJECT
(39) AND UNKNOWN OTHER VEHICLE CONFIGURATION

RIGHT SIDE OF CASE VEHICLE

(41) AND FRONT OF CONTACTED VEHICLE *(TYPE T)*
(42) AND FRONT OF CONTACTED VEHICLE *(TYPE L)*
(43) AND SIDE OF CONTACTED VEHICLE *(NOT SIDESWIPE)*
(44) AND REAR OF CONTACTED VEHICLE *(TYPE T)*
(45) AND REAR OF CONTACTED VEHICLE *(TYPE L)*
(46) SIDESWIPED BY CONTACTED VEHICLE
(47) AND OBJECT
(49) AND UNKNOWN OTHER VEHICLE CONFIGURATION

OTHER

(57) VEHICLE TO OBJECT
(58) VEHICLE TO VEHICLE
(59) VEHICLE TO VEHICLE, CONFIGURATION UNKNOWN

ROLLOVER

(61) LESS THAN 360°
(62) 360° OR MORE
(69) DETAILS UNKNOWN

UNKNOWN

(99) IMPACT TYPE UNKNOWN

CODES FOR VEHICLE/OBJECT CONTACTED

VEHICLE/OBJECT GROUPS

(00) NO OBJECT
(01) - (39) PASSENGER VEHICLE & TRUCK
(40) - (69) OTHER VEHICLE
(70) - (76) PEDESTRIAN & ON-ROADWAY OBJECT
(77) - (97) OFF-ROADWAY OBJECT

(98) OTHER *(DESCRIBE)*
(99) UNKNOWN

PASSENGER VEHICLE

(02) LARGE
(03) LIMOUSINE
(17) PICKUP
(20) UNKNOWN PASSENGER VEHICLE BODY
(24) SUB-MINI
(25) MINI
(26) SUB-COMPACT
(27) COMPACT
(28) INTERMEDIATE
(29) FULL

SIZE	WHEELBASE
SUB-MINI	< 2286 mm (< 90")
MINI	2286 - 2412 mm (90" - 94.9")
SUB-COMPACT	2413 - 2539 mm (95" - 99.9")
COMPACT	2540 - 2666 mm (100" - 104.9")
INTERMEDIATE	2667 - 2793 mm (105" - 109.9")
FULL	2794 - 2920 mm (110" - 114.9")
LARGE	2921 - 3174 mm (115" - 124.9")
LIMOUSINE	> 3175 mm (> 125")

MULTIPURPOSE PASSENGER VEHICLE

(11) SMALL VAN *(MINI)*
(12) PICKUP
(14) SMALL UTILITY *(WHEELBASE LESS THAN 107", E.G. JEEP, BRONCO)*
(15) LARGE UTILITY *(WHEELBASE MORE THAN 107", E.G. PANEL TRUCK, SUBURBAN)*
(16) PICKUP TRUCK WITH CANOPY/SHELL COVER
(17) PICKUP CAR WITH CANOPY/SHELL COVER
(21) MOTOR HOME
(22) PICKUP TRUCK WITH SLIDE-IN CAMPER
(23) PICKUP CAR WITH SLIDE-IN CAMPER
(31) CHASSIS-MOUNTED CAMPER

TRUCK

(11) SMALL VAN *(E.G. ECONOLINE)*
(12) PICKUP TRUCK
(13) UNKNOWN LIGHT TRUCK
(15) LARGE UTILITY *(E.G. PANEL TRUCK, SUBURBAN)*
(16) PICKUP TRUCK WITH CANOPY/SHELL COVER
(22) PICKUP TRUCK WITH SLIDE-IN CAMPER
(30) UNKNOWN TRUCK TYPE
(31) CHASSIS-MOUNTED CAMPER
(33) DELIVERY VAN *(WALK-IN)*
(34) STRAIGHT TRUCK
(35) TRUCK-TRACTOR *(BOBTAIL)*
(36) CHASSIS-CAB
(37) UNKNOWN HEAVY TRUCK
(38) TRACTOR & SEMI-TRAILER *(SEMI)*
(39) TRUCK *(OR SEMI)* & FULL TRAILER*(S)*

BUS

(40) UNKNOWN BUS TYPE
(41) SCHOOL BUS
(42) INTERCITY BUS (BETWEEN CITIES)
(43) TRANSIT BUS (INTRACITY)
(44) STREETCAR (ON TRACKS)

MOTORCYCLE

(50) UNKNOWN MOTORCYCLE TYPE
(51) 1 - 75 cc
(52) 76 - 125 cc
(53) 126 - 250 cc
(54) 251 - 500 cc
(55) 501 - 750 cc
(56) 751 cc +
(57) 3-WHEELS *(OR WITH SIDECAR)*

SPECIAL PURPOSE VEHICLE

(60) UNKNOWN/OTHER SPECIAL VEHICLE *(DESCRIBE)*
(61) SNOWMOBILE
(62) ATV *(ALL TERRAIN VEHICLE)*
(63) AMPHIBIOUS VEHICLE
(64) FARM VEHICLE
(65) CONSTRUCTION VEHICLE
(66) TRAILER, PRIVATE *(CAMPER)*
(67) TRAILER, COMMERCIAL *(CARGO)*
(68) TRAIN *(CARS)*
(69) LOCOMOTIVE *(ENGINE, SWITCHER)*

OBJECT

(70) PEDESTRIAN
(71) BICYCLIST, OTHER PEDALCYCLIST
(72) PEDESTRIAN CONVEYANCE *(E.G. PERSON RIDING ANIMAL, CART)*
(73) LARGE ANIMAL
(74) FALLEN OBJECT *(E.G. OBJECT DISLODGED FROM OTHER VEHICLE, FALLEN TREE, ROCKS)*
(75) ROCKS
(76) CONSTRUCTION EQUIPMENT *(EXCLUDING (65))*
(77) SIGN POST, UTILITY POLE, TREE
(78) DITCH
(79) EMBANKMENT, SNOWBANK, RR TRACKS RR X
(80) GROUND *(ROLLOVER ONLY)*
(81) CURB *(DAMAGE PRODUCING IMPACTS ONLY)*
(82) CULVERT
(83) FENCE
(84) HYDRANT, SHORT POST, STUMP
(85) SMALL POST/TREE, RURAL MAIL BOX, MILE MARKER, DELINEATOR
(86) BUILDING
(87) PIER, PILLAR, BRIDGE SUPPORT
(88) ABUTMENT, RETAINING WALL
(89) BRIDGE RAIL
(90) GUARD RAIL, LEADING SECTION
(91) GUARD RAIL, MIDDLE OR UNKNOWN
(92) GUARD RAIL, TRAILING SECTION
(93) GUARD POST *(TIMBER, METAL, CONCRETE)*
(94) CABLE, FENCE BARRIER
(95) CONCRETE BARRIER *(MEDIAN)*
(96) IMPACT ATTENUATOR
(97) BREAKAWAY FEATURES

Duplicate columns 1-8 from the previous card.

Module C (9) R (10) Format 0 (11) 1 (12)

CRASH RECONSTRUCTION for ΔV — CR-1

	CASE VEHICLE PRIMARY IMPACT		CASE VEHICLE SECONDARY IMPACT	
	CASE VEHICLE	CONTACTED VEHICLE	CASE VEHICLE	CONTACTED VEHICLE
EVENT NUMBER	1 (13)		(47)	
ΔV (km/h) TOTAL	9 — (14 15 16)	9 — (32 33 34)	(48 49 50)	(66 67 68)
LONGITUDINAL*	9 — (17 – 20)	9 — (35 – 38)	(51 – 54)	(69 – 72)
LATERAL*	9 — (21 – 24)	9 — (39 – 42)	(55 – 58)	(73 – 76)
ENERGY DISSIPATED BY CRUSH (kj)	9 — (25 – 28)	9 — (43 – 46)	(59 – 62)	(77 – 80)
RECONSTRUCTION				
(01) RECONSTRUCTED, UNKNOWN CONFIDENCE LEVEL	1 2 (29 30)		(63 64)	
(21) RECONSTRUCTED, LOW CONFIDENCE LEVEL				
(22) RECONSTRUCTED, MODERATE CONFIDENCE LEVEL				
(23) RECONSTRUCTED, HIGH CONFIDENCE LEVEL				
NOT RECONSTRUCTED BECAUSE				
(02) INSUFFICIENT DATA				
(03) EXCESSIVE UNDERRIDE/ OVERRIDE				
(04) ROLLOVER				
(05) VAULTING				
(06) OTHER TRAVEL IN MORE THAN ONE PLANE				
(07) NON-HORIZONTAL FORCE				
(08) SIDESWIPE-TYPE DAMAGE				
(09) YIELDING OBJECT				
(10) OTHER: _____				
(11) AT LEAST ONE VEHICLE BEYOND SCOPE				
(12) OTHER VEHICLE NOT INSPECTED				
MODE				
(1) CDC ONLY				
(2) CDC & DETAILED DAMAGE	5 (31)		(65)	
(3) TRAJECTORY & CDC				
(4) TRAJECTORY & CDC & DETAILED DAMAGE				
(5) NOT RECONSTRUCTED				
COMPUTER PROGRAM SPECIFY: _____				

*NOTE: THESE ΔV COMPONENTS MUST INCLUDE SIGN.

EXAMPLES: 10 km/h = +010
-7 km/h = -007

Duplicate columns 1-8 from the previous card. Module C (9) R (10) Format 0 (11) 2 (12)

CRASH RECONSTRUCTION for EBS — CR-2

	CASE VEHICLE PRIMARY IMPACT		CASE VEHICLE SECONDARY IMPACT	
	CASE VEHICLE	CONTACTED VEHICLE	CASE VEHICLE	CONTACTED VEHICLE
EVENT NUMBER	1 (13)	-	(47)	
EBS (km/h) TOTAL	032 (14 15 16)	9 — (32 33 34)	(48 49 50)	(66 67 68)
LONGITUDINAL*	-031 (17 20)	9 — (35 38)	(51 54)	(69 72)
LATERAL*	+006 (21 24)	9 — (39 42)	(55 58)	(73 76)
ENERGY DISSIPATED BY CRUSH (kj)	0070 (25 28)	9 — (43 46)	(59 62)	(77 80)
RECONSTRUCTION				
(01) RECONSTRUCTED, UNKNOWN CONFIDENCE LEVEL	22 (29 30)		(63 64)	
(21) RECONSTRUCTED, LOW CONFIDENCE LEVEL				
(22) RECONSTRUCTED, MODERATE CONFIDENCE LEVEL				
(23) RECONSTRUCTED, HIGH CONFIDENCE LEVEL				
NOT RECONSTRUCTED BECAUSE				
(02) INSUFFICIENT DATA				
(03) EXCESSIVE UNDERRIDE/ OVERRIDE				
(04) ROLLOVER				
(05) VAULTING				
(06) OTHER TRAVEL IN MORE THAN ONE PLANE				
(07) NON-HORIZONTAL FORCE				
(08) SIDESWIPE-TYPE DAMAGE				
(09) YIELDING OBJECT				
(10) OTHER: _____				
(11) AT LEAST ONE VEHICLE BEYOND SCOPE				
(12) OTHER VEHICLE NOT INSPECTED				
MODE				
(1) CDC ONLY				
(2) CDC & DETAILED DAMAGE				
(3) TRAJECTORY & CDC	2 (31)		(65)	
(4) TRAJECTORY & CDC & DETAILED DAMAGE				
(5) NOT RECONSTRUCTED				
COMPUTER PROGRAM SPECIFY: WIN SMASH				

*NOTE: THESE EBS COMPONENTS MUST INCLUDE SIGN.

EXAMPLES: 10 km/h = +010
-7 km/h = -007

Duplicate columns 1-8 from the previous card. Module C (9) R (10) Format 0 (11) 3 (12)

CRASH RECONSTRUCTION CR-3

NOTES:

1. *ENTER CRASH RECONSTRUCTION DAMAGE MEASUREMENTS IN CENTIMETERS.*
2. *MEASURE C_1 TO C_6 FROM DRIVER TO PASSENGER SIDE IN FRONT OR REAR IMPACTS, REAR TO FRONT IN SIDE IMPACTS.*
3. *D IS POSITIVE IF MEASURED TO A POINT FORWARD OF OR TO THE RIGHT OF THE CG.*
4. *USE THE CENTER OF THE WHEELBASE AS THE CG.*

CASE VEHICLE LOCATOR

Locate the end of the damage with respect to the vehicle longitudinal center line, or an undamaged axle for side impacts.

Specific Impact No.	Location of Direct Damage	Location of Field L
1	122 cm rt of lt. BC	Ft. bumper BC to BC

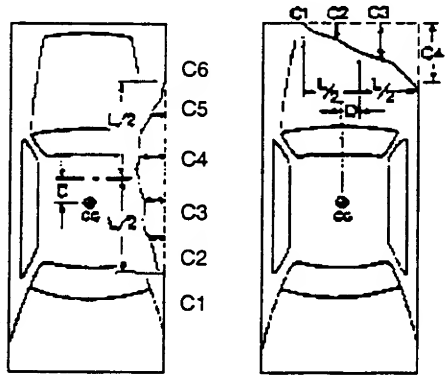

UEW = 146

DL 122

UDL 24

PLANE:
(1) Bumper
(2) Above Bumper
(3) Sill
(4) Above Sill
(5) Other _____
(9) Unknown

CRUSH PROFILE IN CENTIMETERS

NOTE: Each line in the table below is a separate record (card). Duplicate columns 1 - 12 for each completed line.

Specific Impact Number	Plane of Impact C-Measur.	Direct Damage Length (DDL)	Direct Damage Max Crush	Field L	C_1	C_2	C_3	C_4	C_5	C_6	±D
1	1	122	30	146	33	28	30	20	13	17	-12
			-3		-17	-7	-3	-3	-7	-17	
1	1	122	027	146	016	021	027	017	006	000	-012
13	14	15 16 17	18 19 20	21 22 23	24 25 26	27 28 29	30 31 32	33 34 35	36 37 38	39 40 41	42 43 44 45
2											

Duplicate columns 1-8 from the previous card. Module C (9) R (10) Format 0 (11) 4 (12)

CRASH RECONSTRUCTION CR-4

NOTES:

1. *ENTER CRASH RECONSTRUCTION DAMAGE MEASUREMENTS IN CENTIMETERS.*
2. *MEASURE C_1 TO C_6 FROM DRIVER TO PASSENGER SIDE IN FRONT OR REAR IMPACTS, REAR TO FRONT IN SIDE IMPACTS.*
3. *D IS POSITIVE IF MEASURED TO A POINT FORWARD OF OR TO THE RIGHT OF THE CG.*
4. *USE THE CENTER OF THE WHEELBASE AS THE CG.*

OTHER VEHICLE

LOCATOR

Locate the end of the damage with respect to the vehicle longitudinal center line, or an undamaged axle for side impacts.

Specific Impact No.	Location of Direct Damage	Location of Field L

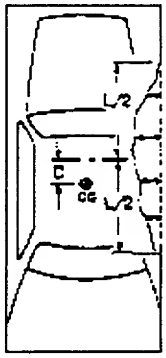

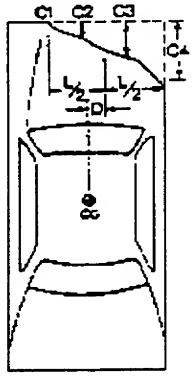

DL _____

UDL _____

PLANE:
(1) Bumper
(2) Above Bumper
(3) Sill
(4) Above Sill
(5) Other _____
(9) Unknown

CRUSH PROFILE IN CENTIMETERS

NOTE: Each line in the table below is a separate record (card). Duplicate columns 1 - 12 for each completed line.

Specific Impact Number	Plane of Impact C-Measur.	Direct Damage Length (DDL)	Direct Damage Max Crush	Field L	C_1	C_2	C_3	C_4	C_5	C_6	±D
1	9	999	999	999	999	999	999	999	999	999	+999
13	14	15 16 17	18 19 20	21 22 23	24 25 26	27 28 29	30 31 32	33 34 35	36 37 38	39 40 41	42 43 44 45
2											

Duplicate columns 1-8 from the previous card. Module W (9) T (10) Format 0 (11) 1 (12)

WHEELS AND TIRES WT-1

WHEELS--DAMAGED

(0) NO
(1) YES
(9) UNKNOWN

LF	0 (13)
RF	0
RR	0
LR	0 (16)

TIRE TREAD TYPE

(1) REGULAR
(2) SNOW
(3) SLICKS
(4) ALL WEATHER (MS)
(7) OTHER: _____
(9) UNKNOWN

LF	4 (17)
RF	4
RR	4
LR	4 (20)

CARCASS CONSTRUCTION

(1) BIAS
(2) BELTED BIAS
(3) RADIAL
(4) ELLIPTICAL
(5) HI PRESSURE SPARE
(6) SPACE SAVER SPARE
(7) OTHER: _____
(9) UNKNOWN

LF	3 (21)
RF	3
RR	3
LR	3 (24)

SIZE *(NOT DOT CODE. IF UNKNOWN, USE 9'S)*

LF	225 50 R 17 (25)
RF	(35)
RR	(45)
LR	(55)

IF VEHICLE IS EQUIPPED WITH DUAL WHEELS, COMPLETE FOR OUTER WHEELS AND MAKE NOTES ON INNER WHEELS.

NOTES: _____

Duplicate columns 1-8 from the previous card. Module F (9) T (10) Format 0 (11) 1 (12)

FUEL AND FUEL TANKS FT-1

TYPE OF PROPULSIVE FUEL (1) GASOLINE (2) DIESEL OIL (3) LPG (4) ELECTRIC (7) OTHER: _____ (9) UNKNOWN	1 (13)	AUXILIARY TANK TYPE (1) OEM TANK (2) AFTER MARKET TANK (8) NOT APPLICABLE *(NOT EQUIPPED)* (9) UNKNOWN	8 (21)
MAIN TANK LOCATION	322 (14–16)	AUXILIARY TANK LOCATION	888 (22–24)
MAIN FILLER CAP LOCATION	113 (17–19)	AUXILIARY FILLER CAP LOCATION	888 (25–27)
MAIN TANK MATERIAL	1 (20)	AUXILIARY TANK MATERIAL	8 (28)

TANK AND FILLER CAP LOCATION CODES

FIRST DIGIT *(LONGITUDINAL)*

(1) BEHIND KICK-UP
(2) IN KICK-UP
(3) BETWEEN KICK-UP & COWL
(4) FORWARD OF COWL
(8) NOT APPLICABLE *(NOT EQUIPPED)*
(9) UNKNOWN

SECOND DIGIT *(LATERAL)*

(1) LEFT OF FRAME
(2) WITHIN FRAME OR CENTERED
(3) RIGHT OF FRAME
(4) DUAL, RIGHT & LEFT TANKS
(8) NOT APPLICABLE *(NOT EQUIPPED)*
(9) UNKNOWN

THIRD DIGIT *(VERTICAL)*

(1) BELOW FRAME
(2) WITHIN FRAME OR CENTERED
(3) ABOVE FRAME
(8) NOT APPLICABLE *(NOT EQUIPPED)*
(9) UNKNOWN

TANK MATERIAL CODES

(1) STEEL
(2) ALUMINUM
(3) PLASTIC
(7) OTHER
(8) NOT APPLICABLE *(NOT EQUIPPED)*
(9) UNKNOWN

Duplicate columns 1-8 from the previous card. Module F (9) L (10) Format 0 (11) 1 (12)

FUEL LEAKAGE FL-1

DID FUEL LEAKAGE RESULT FROM A CRASH EVENT

(0) NO KNOWN LEAKAGE *SKIP PAGE.* **0** (13)

(1) YES *COMPLETE PAGE.*

LEAK NUMBER	I LEAKING COMPONENT	II COMPONENT SOURCE	III TYPE OF DAMAGE	IV SEVERITY OF DAMAGE	V LOCATION OF LEAK	EVENT NUMBER
#1	__ __ (14 15)	__	__	__	__ __	__ (21)
#2	__ __ (22 23)	__	__	__	__ __	__ (29)
#3	__ __ (30 31)	__	__	__	__ __	__ (37)
#4	__ __ (38 39)	__	__	__	__ __	__ (45)
#5	__ __ (46 47)	__	__	__	__ __	__ (53)

I LEAKING COMPONENT

TANK AREA

(11) MAIN FUEL TANK *(INCLUDING VAPOR RECOVERY DOME)*
(12) AUXILIARY FUEL TANK
(13) MAIN TANK FILLER TUBE
(14) MAIN TANK CAP *(GAS CAP)*
(15) AUXILIARY TANK FILLER TUBE
(16) AUXILIARY TANK CAP *(GAS CAP)*
(19) TANK AREA, DETAILS UNKNOWN

DELIVERY SYSTEM

(21) FUEL FEED LINE *(MAIN TANK TO FUEL PUMP)*
(22) FUEL FEED LINE *(AUXILIARY TANK TO FUEL PUMP)*
(23) FUEL RETURN LINE *(FUEL PUMP TO TANK)*
(24) INLINE FUEL FILTER
(25) FUEL LINE *(PUMP TO CARBURETOR OR INJECTOR PUMP)*
(26) CARBURETOR TO INJECTOR PUMP
(27) FUEL PUMP
(29) DELIVERY SYSTEM, DETAILS UNKNOWN

EVAPORATIVE EMISSION CONTROL SYSTEM

(31) ATMOSPHERIC VENT PIPE *(NON-EEC EQUIPPED)*
(32) EEC PIPE *(VAPOR CANISTER TO CARBURETOR)*

EEC SYSTEM (CONTINUED)

(33) VAPOR RECOVERY HOSES *(CANISTER TO CARBURETOR)*
(34) LIQUID-VAPOR SEPARATOR *(UNLESS PART OF TANK)*
(35) CANISTER
(39) EEC SYSTEM, DETAILS UNKNOWN

(49) ENGINE COMPARTMENT, COMPONENT UNKNOWN
(99) COMPONENT UNKNOWN

II COMPONENT SOURCE

(1) OEM
(2) AFTER MARKET
(9) UNKNOWN

III TYPE OF DAMAGE

(1) DENTED/CRUSHED
(2) PUNCTURED
(3) RUPTURED
(4) SEVERED/GROSS TEARS
(5) DISCONNECTED/DEFEATED
(9) UNKNOWN

IV SEVERITY OF DAMAGE

(1) MINOR
(2) MODERATE
(3) SEVERE
(4) DISCONNECTED/DEFEATED
(9) UNKNOWN

V LOCATION OF LEAK

FIRST DIGIT
(LONGITUDINAL LOCATION)

(1) F, FORWARD OF COWL
(2) P, BETWEEN COWL & REAR BULKHEAD
(3) B, BEHIND REAR BULKHEAD
(4) Y, F, & P
(5) Z, P, & B
(6) D, DISTRIBUTED *(F, P & B)*
(9) UNKNOWN

SECOND DIGIT
(LATERAL LOCATION)

(1) L, LEFT
(2) C, CENTER
(3) R, RIGHT
(4) Y, LEFT CENTER *(L & C)*
(5) Z, RIGHT CENTER *(R & C)*
(6) D, DISTRIBUTED *(F, P & B)*
(9) UNKNOWN

Duplicate columns 1-8 from the previous card. Module F (9) R (10) Format 0 (11) 1 (12)

FIRE FR-1

WAS THERE FIRE IN OR ON CASE VEHICLE?

(0) NO *SKIP PAGE.*

(1) YES *COMPLETE PAGE.*

0 (13)

DID FIRE START IN CASE VEHICLE?

(0) NO
(1) YES
(9) UNKNOWN

___ (14)

FLAME PROPOGATION RATE

(1) RAPID/EXPLOSIVE
(2) SLOW/MODERATE
(9) UNKNOWN

___ (15)

SEVERITY OF FIRE DAMAGE

(1) MINOR
(2) MODERATE
(3) SEVERE
(9) UNKNOWN

___ (16)

DID AN INJURY TO CASE VEHICLE OCCUPANT RESULT FROM FIRE IN OR ON CASE VEHICLE?

(0) NO
(1) YES
(9) UNKNOWN

___ (17)

PROVIDE NOTES IF FIRE OCCURRED.

Duplicate columns 1-8 from the previous card. Module E (9) D (10) Format 0 (11) 1 (12)

EXTERIOR DAMAGE ED-1

HOOD PERFORMANCE

FOR THE FOLLOWING, USE CODES:

(0) NO
(1) YES
(8) NOT APPLICABLE
(9) UNKNOWN

HOOD LATCH*(ES)*- -RELEASED 0 (13)

-DAMAGED 1 (14)

pried open -JAMMED 1 (15)

HOOD HINGES- -LEFT, DAMAGED 0 (16)

-LEFT, SEPARATED *(COMPLETE)* 8 (17)

-RIGHT, DAMAGED 0 (18)

-RIGHT, SEPARATED *(COMPLETE)* 8 (19)

HOOD REMAINED ON VEHICLE 1 (20)

REAR EDGE OF HOOD- -ELEVATED 1 (21)

-CONTACTED WINDSHIELD 0 (22)

-PENETRATED WINDSHIELD 8 (23)

HOOD LATCH LOCATION

(1) FRONT OF VEHICLE
(2) COWL AREA
(3) SIDE
(8) NOT APPLICABLE
(9) UNKNOWN

1 (24)

ENGINE OR TRANSMISSION MOUNT

SEPARATION *(COMPLETE)*

(0) NO
(1) YES
(9) UNKNOWN

0 (25)

STEERING COL FLEXIBLE COUPLING

FLEXIBLE COUPLING TYPE

(0) NONE
(1) FLEXIBLE MATERIAL
(2) POT
(3) SINGLE U-JOINT
(4) DOUBLE U-JOINT
(5) FLEXIBLE CABLE
(6) COMBINATION OF ABOVE *(CIRCLE EACH)*
(7) OTHER: _____
(8) EQUIPPED, TYPE UNKNOWN
(9) UNKNOWN, IF EQUIPPED

9 (26)

COUPLING- -DAMAGED 9 (27)

(USE CODES FROM HOOD PERFORMANCE) -SEPARATED *(COMPLETE)* 9 (28)

ENG COMPART TELESCOPING UNIT

TYPE OF UNIT

(00) NONE INSTALLED
(01) - (07) SEE UNITS ON PAGE ED-2
(88) NOT COLLECTED
(97) OTHER: _____
(98) EQUIPPED, TYPE UNKNOWN
(99) UNKNOWN IF EQUIPPED

8 8 (29 30)

ORIGINAL LENGTH *(mm)*

F *(OR H)*: _____

TELESCOPED LENGTH *(mm)*

G: _____

DIFFERENCE *(mm)*

F *(OR H)* - G

(IF LESS THAN 15mm, ENTER "000".)

(888) NOT COLLECTED
(991) NOT MEASURED/NO COMPRESSION
(992) COMPRESSED, AMOUNT UNKNOWN
(993) DEVICE EXTENDED
(997) UNABLE TO BE MEASURED
(998) NOT APPLICABLE *(NOT EQUIPPED)*
(999) UNKNOWN

8 8 8 (31 33)

LEFT-SIDE BODY MOUNT

DID BODY MOUNT SEPARATE?

(0) NO
(1) YES
(8) NOT APPLICABLE
(9) UNKNOWN

8 (34)

LEFT PILLARS

PILLARS SEPARATED COMPLETELY -

USE CODES:

(0) NO
(1) YES
(4) NO SEPARATION, BUT DAMAGED
(8) NOT APPLICABLE *(NOT EQUIPPED)*
(9) UNKNOWN

-A-PILLAR,	UPPER	0 (35)
	LOWER	0 (36)
-B-PILLAR,	UPPER	0 (37)
	LOWER	0 (38)
-C-PILLAR,	UPPER	0 (39)
	LOWER	0 (40)
-D-PILLAR,	UPPER	0 (41)
	LOWER	8 (42)

LEFT DOORS

HOW DID DOORS OPEN DURING COLLISION?

USE CODES:

(0) DOOR DID NOT OPEN

OPENED BECAUSE OF

(1) HINGE AREA SEPARATION
(2) DOOR-LATCH SEPARATION
(3) LATCH-STRIKER SEPARATION
(4) STRIKER-PILLAR SEPARATION
(5) BODY DISTORTION
(6) COMBINATION OF ABOVE *(CIRCLE EACH)*
(7) OPENED, REASON UNKNOWN

(8) NOT APPLICABLE *(NO DOOR)*
(9) UNKNOWN

-FRONT	0 (43)
-REAR	0 (44)

DOORS JAMMED CLOSED-

USE CODES:

(0) NO
(1) YES
(8) NOT APPLICABLE *(NO DOOR)*
(9) UNKNOWN

-FRONT	0 (45)
-REAR	0 (46)

REAR DOOR

REAR DOOR TYPE

(0) NO DOOR (INCLUDES PICKUPS)
(1) HATCHBACK
(2) ONE-WAY TAILGATE
(3) TWO-WAY TAILGATE
(4) CLAMSHELL/DISAPPEARING TAILGATE
(5) SINGLE DOOR
(6) DOUBLE DOOR
(9) UNKNOWN

0 (47)

Hatchback

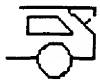

One-way

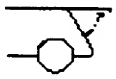

Two-way

or

Clamshell

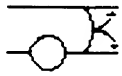

Single door

Double door

HOW DID DOOR OPEN DURING COLLISION?

(0) DOOR DID NOT OPEN

OPENED BECAUSE OF

(1) HINGE AREA SEPARATION
(2) DOOR-LATCH SEPARATION
(3) LATCH-STRIKER SEPARATION
(4) STRIKER-PILLAR SEPARATION
(5) BODY DISTORTION
(6) COMBINATION OF ABOVE *(CIRCLE EACH)*
(7) OPENED, REASON UNKNOWN

(8) NOT APPLICABLE *(NO DOOR)*
(9) UNKNOWN

8 (48)

DOOR JAMMED CLOSED

(0) NO
(1) YES
(8) NOT APPLICABLE *(NO DOOR)*
(9) UNKNOWN

8 (49)

OTHER REAR DAMAGE

WAS PARTITION TO LUGGAGE AREA DAMAGED DURING COLLISION?

(0) NO
(1) YES
(8) NOT APPLICABLE
(9) UNKNOWN

0 (50)

SPARE TIRE

(0) NO SPARE TIRE
(1) NOT ATTACHED BEFORE COLLISION
(2) ATTACHED, NOT SEPARATED IN COLLISION
(3) ATTACHED, SEPARATED DUE TO COLLISION
(8) NOT COLLECTED
(9) UNKNOWN

8 (51)

TRAILER HITCH TYPE

(0) NO HITCH

BALL-AND-SOCKET TYPES

(1) TEMPORARY FRAMEWORK *(E.G. RENTAL CLAMP-ON)*
(2) BUMPER-MOUNT ONLY *(E.G. LIGHT TRUCK)*
(3) BUMPER-AND-FRAME *(BUT NON-EQUALIZING)*
(4) LOAD EQUALIZING

OTHER TYPES

(5) RING-AND-PINTLE
(6) FIFTH-WHEEL *(INCL. P/U)*
(7) OTHER *(E.G. CLEVIS-AND-PIN)*

_____

(8) EQUIPPED, TYPE UNKNOWN
(9) UNKNOWN IF EQUIPPED

0 (52)

TRAILER TYPE *(AT TIME OF COLLISION)*

(0) NO TRAILER
(1) TRAVEL-TRAILER/CAMPER
(2) MOBILE HOME
(3) BOAT/SNOWMOBILE/ATV TRAILER
(4) UTILITY TRAILER
(5) TOWED CAR
(7) OTHER: _____
(8) TRAILER, TYPE UNKNOWN
(9) UNKNOWN

8 (53)

RIGHT-SIDE BODY MOUNT

DID BODY MOUNT SEPARATE?

(0) NO
(1) YES
(8) NOT APPLICABLE
(9) UNKNOWN

8 (54)

RIGHT PILLARS

PILLARS SEPARATED COMPLETELY -

USE CODES:

(0) NO
(1) YES
(4) NO SEPARATION, BUT DAMAGED
(8) NOT APPLICABLE *(NOT EQUIPPED)*
(9) UNKNOWN

-A-PILLAR,	UPPER	0 (55)
	LOWER	0 (56)
-B-PILLAR,	UPPER	0 (57)
	LOWER	0 (58)
-C-PILLAR,	UPPER	0 (59)
	LOWER	0 (60)
-D-PILLAR,	UPPER	0 (61)
	LOWER	8 (62)

RIGHT DOORS

HOW DID DOORS OPEN DURING COLLISION?

USE CODES:

(00) DOOR DID NOT OPEN

OPENED BECAUSE OF

(01) HINGE AREA SEPARATION
(02) DOOR-LATCH SEPARATION
(03) LATCH-STRIKER SEPARATION
(04) STRIKER-PILLAR SEPARATION
(05) BODY DISTORTION
(06) COMBINATION OF ABOVE *(CIRCLE EACH)*
(07) OPENED, REASON UNKNOWN
(11) VAN RIGHT-REAR DOOR OPENED *(ANY MECHANISM)*

(98) NOT APPLICABLE *(NO DOOR)*
(99) UNKNOWN

-FRONT	0 (63)	0 (64)
-REAR	0 (65)	0 (66)

DOORS JAMMED CLOSED-

USE CODES:

(0) NO
(1) YES
(8) NOT APPLICABLE *(NO DOOR)*
(9) UNKNOWN

-FRONT	0 (67)
-REAR	0 (68)

VAN REAR DOOR TYPE

(0) VAN, NO REAR DOOR
(1) TRACK *(SLIDING)* - RIGHT SIDE
(2) SINGLE-HINGED - RIGHT SIDE
(3) DOUBLE-HINGED - RIGHT SIDE
(4) TRACK *(SLIDING)* - RIGHT & LEFT SIDE
(5) SINGLE-HINGED - RIGHT & LEFT SIDE
(6) DOUBLE-HINGED - RIGHT & LEFT SIDE
(7) TRACK AND HINGED COMBINATION
(8) NOT APPLICABLE *(NOT A VAN)*
(9) UNKNOWN

8 (69)

WINDSHIELD DAMAGE

WINDSHIELD CRACKED

(0) NO
(1) YES
(8) NOT APPLICABLE
(9) UNKNOWN

0 (70)

WINDSHIELD BROKEN
(PLASTIC INTERLAYER TORN)

(0) NO
(1) YES
(8) NOT APPLICABLE
(9) UNKNOWN

8 (71)

CRACKED OR BROKEN BY OCCUPANT CONTACT

(0) NO
(1) YES
(8) NOT APPLICABLE
(9) UNKNOWN

8 (72)

EXTENT OF BOND SEPARATION

(0) NONE
(1) 1 - 20%
(2) 21 - 40
(3) 41 - 60
(4) 61 - 80
(5) 81 - 99
(6) TOTAL
(7) SEPARATED, AMOUNT UNKNOWN
(8) NOT APPLICABLE
(9) UNKNOWN

0 (73)

WINDSHIELD MARK ON CASE VEHICLE:

VOLVO
PILKINGTON
[redacted]

WINDSHIELD CODE

(97) DESCRIBED BUT NOT CODED
(98) NOT APPLICABLE *(NO WINDSHIELD)*
(99) UNKNOWN

9 (74) 2 (75)

ROOF

DID T-ROOF/SUN ROOF OPEN DURING COLLISION?

(0) NO
(1) YES
(8) NOT APPLICABLE (NOT A T-ROOF OR SUN ROOF)
(9) UNKNOWN

0 (76)

LOCATE AREA OF WINDSHIELD INTEREST OR DAMAGE WITH DIMENSIONS (VERTICAL & HORIZONTAL) ON THIS DIAGRAM OF THE WINDSHIELD AS VIEWED FROM INSIDE.

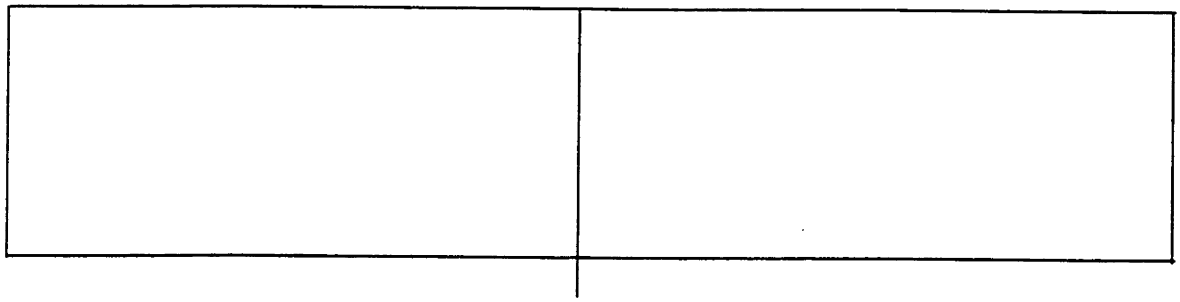

L ℄ R

Duplicate columns 1-8 from the previous card. Module S (9) C (10) Format 0 (11) 1 (12)

STEERING WHEEL AND COLUMN SC-1

STEERING WHEEL

STEERING WHEEL RIM DAMAGE

(0) NONE
(1) DEFORMED SLIGHTLY
(2) SEVERELY BENT
(3) BROKEN
(9) UNKNOWN

0 (13)

NUMBER OF STEERING WHEEL SPOKES

(9) UNKNOWN

4 (14)

STEERING WHL SPOKE DAMAGE

(0) NONE
(1) DEFORMED SLIGHTLY
(2) SEVERELY BENT
(3) BROKEN
(9) UNKNOWN

0 (15)

STEERING WHEEL POSITION AT TIME OF COLLISION

IN WHAT O'CLOCK POSITION WAS THE NORMAL TOP OF THE WHEEL POINTED WHEN THE COLLISION OCCURRED?

EXAMPLES

O'CLOCK = 1 2

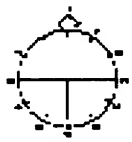

(NORMAL STRAIGHT AHEAD)

O'CLOCK = 0 2

O'CLOCK = 1 2

(99) UNKNOWN

STEERING WHEEL ENERGY ABSORBING DEVICE

(1) *EXAMPLES:*

BARRACUDA, 70 - 74
CHALLENGER, 70 -74
CAPRI, 71 - 77

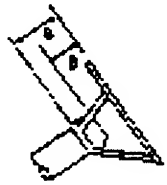

(2) *EXAMPLES:*

OMNI, 78 -
HORIZON, 78 -

TYPE OF DEVICE

(0) NONE
(1) CONVOLUTED OR MESH CYLINDER
(2) DEEP DISH STEERING WHEEL
(7) OTHER: _____
(8) NOT COLLECTED
(9) UNKNOWN IF EQUIPPED

8 (19)

ORIGINAL DIMENSION *(mm)*

A: _____

DAMAGE DIMENSION *(mm)*

B: _____

DIFFERENCE *(mm)*

A - B

(888) NOT COLLECTED
(991) NOT MEASURED/NO APPARENT COMPRESSION
(992) COMPRESSED, AMOUNT UNKNOWN
(993) DEVICE EXTENDED
(997) UNABLE TO MEASURE
(998) NOT APPLICABLE *(NOT EQUIPPED)*
(999) UNKNOWN

8 8 8 (20 22)

STEERING COLUMN OPTIONS

TILT FEATURE

(0) NOT EQUIPPED
(1) YES, EQUIPPED, UNK POSITION
(2) UP
(3) MIDDLE
(4) LOWER
(9) UNKNOWN IF EQUIPPED

3 (16)

SWING-AWAY FEATURE

(0) NOT EQUIPPED
(1) YES, EQUIPPED
(9) UNKNOWN IF EQUIPPED

0 (17)

TELESCOPING FEATURE

(0) NOT EQUIPPED
(1) YES, EQUIPPED
(9) UNKNOWN IF EQUIPPED

0 (18)

STEERING COLUMN ENERGY ABSORBING DEVICE

TYPE OF DEVICE * *(IF 27 OR 28)*

(00) NOT EQUIPPED
(88) NOT COLLECTED
(99) UNKNOWN

8 8 (23 24)

ORIGINAL LENGTH *(mm)*

C: _____

COMPRESSED LENGTH *(mm)*

D: _____

BRACKET DEFLECTION *(IF CODE 36, 48, OR 49 ABOVE)*

OR

COMPRESSION *(OR EXTRUSION)* *(mm)*

C - D *(OR E)* *(TOLERANCE: ±10)*

(888) NOT COLLECTED
(991) NOT MEASURED/NO APPARENT COMPRESSION
(992) COMPRESSED, AMOUNT UNKNOWN
(993) DEVICE EXTENDED
(997) UNABLE TO BE MEASURED
(998) NOT APPLICABLE *(NOT EQUIPPED)*
(999) UNKNOWN

8 8 8 (25 27)

* *(ADD A & B FOR TOTAL COMPRESSION)*

SHEAR CAPSULE SEPARATION *(mm)*

S *(USE AVG. OF LEFT & RIGHT CAPSULES.)*

LT:

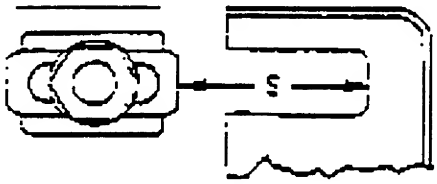

RT:

(888) NOT COLLECTED
(991) NOT MEASURED/NO APPARENT SEPARATION
(992) SEPARATED, AMOUNT UNKNOWN
(997) UNABLE TO BE MEASURED
(998) NOT APPLICABLE *(NOT EQUIPPED)*
(999) UNKNOWN

8 8 8 (28 30)

COLUMN VERTICAL ROTATION

(0) NO APPARENT ROTATION
(1) UPWARD APPARENT ROTATION
(2) DOWNWARD APPARENT ROTATION
(9) UNKNOWN

0 (31)

COLUMN LATERAL ROTATION

(0) NO APPARENT ROTATION
(1) LEFT APPARENT ROTATION
(2) RIGHT APPARENT ROTATION
(9) UNKNOWN

0 (32)

STEERING WHEEL (CONTINUED)

STEERING WHEEL HUB DAMAGE

(0) NONE
(1) OCCUPANT CONTACT
(2) AIRBAG
(3) OTHER _____
(9) UNKNOWN

0 (33)

INTRUSION IT-1

(All Measurements Are in Centimeters)

Location of Intrusion	Intruded Component	Comparison Value	—	Intruded Value	=	Intrusion	Dominant Crush Direction
			—		=		
			—		=		
			—		=		
			—		=		
			—		=		
			—		=		
			—		=		
			—		=		
			—		=		
			—		=		
			—		=		
			—		=		
			—		=		
			—		=		
			—		=		
			—		=		
			—		=		

OCCUPANT CONTACT WORKSHEET

Contact	Interior Component Contacted	Occupant No. if Known	Body Region if Known	Supporting Physical Evidence	Confidence Level of Contact Point
A	Knee Bolster	Dr	Rt Leg	Scuff marks	1
B	SW Hub	Dr	Hand/Arm	Mark - no damage possible burn	3
C					
D					
E					
F					
G					
H					
I					
J					

VEHICLE OCCUPANT CONTACT DIAGRAM

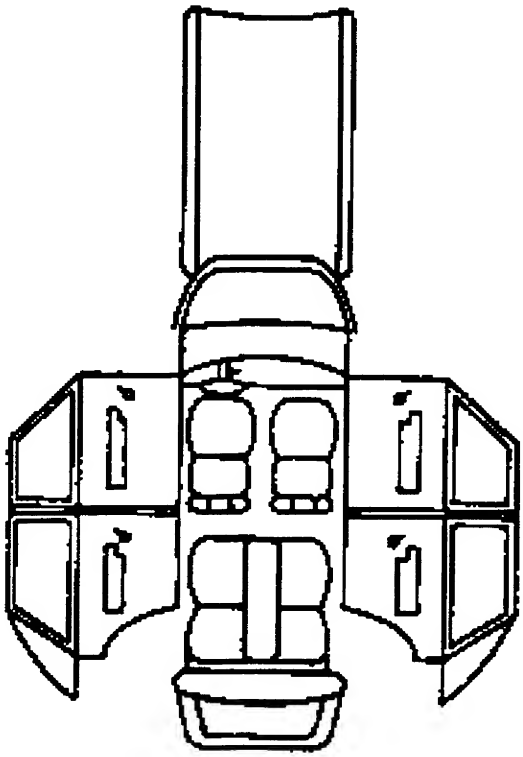

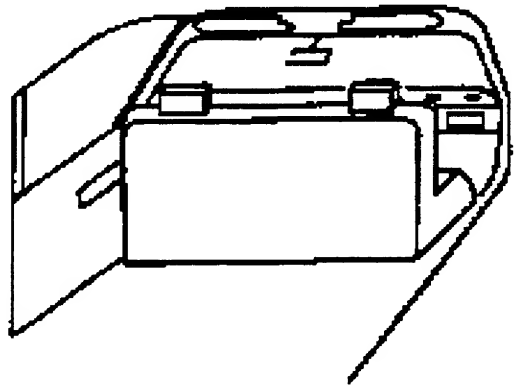

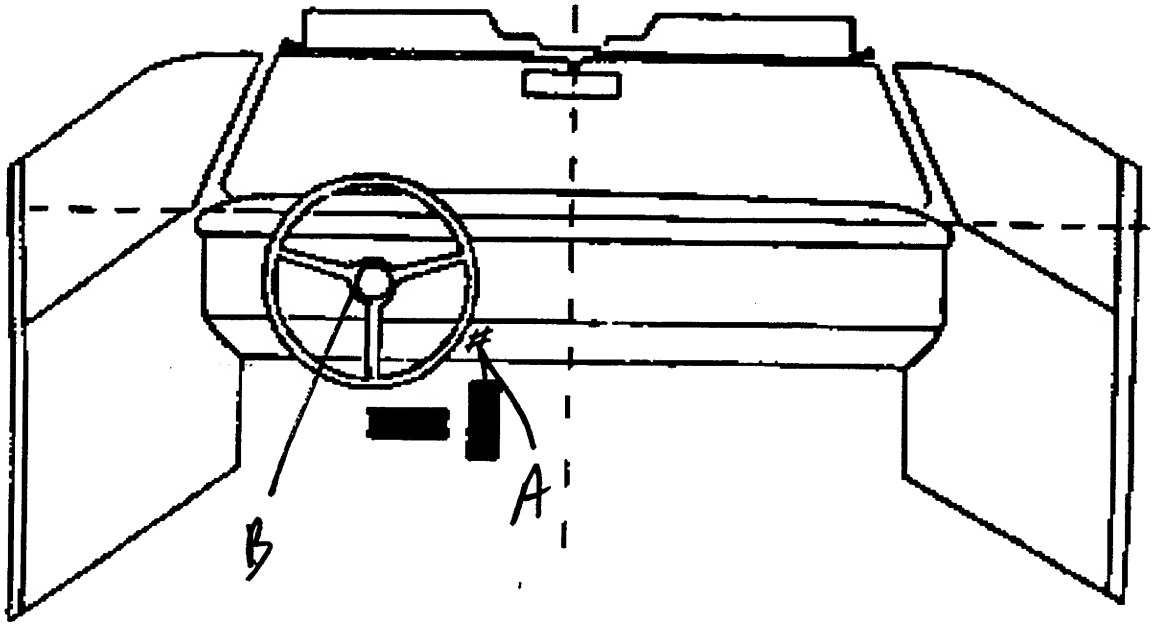

CODES FOR COLUMN B, OCCUPANT SPACE NUMBER

OCCUPANT SPACE NUMBER IS A TWO-DIGIT CODE. THE USE OF THE CODE IS DETERMINED BY THE VEHICLE SEAT CONFIGURATION AT THE TIME OF THE ACCIDENT.

FIRST DIGIT

THE FIRST DIGIT (LEFT DIGIT) DENOTES THE SEAT ROW, WITH CODE VALUES FROM 1 TO 5.

SECOND DIGIT

THE SECOND DIGIT (RIGHT DIGIT) DENOTES THE POSITION ON THE SEAT AND, IN SOME INSTANCES, THE WIDTH OF THE SEAT.

(1) LEFT	(3) RIGHT			INDIVIDUAL SEAT
(1) LEFT	(2) CENTER	(3) RIGHT		BENCH: FULL WIDTH 3 PASSENGER
(1) LEFT	(2) LEFT CENTER	(6) RIGHT CENTER	(3) RIGHT	BENCH: FULL WIDTH 4 PASSENGER
(1) LEFT	(2) CENTER	(5) RIGHT & AISLE SPACE		BENCH: PARTIAL WIDTH, LEFT
(0) LEFT & SPACE	(2) CENTER	(5) RIGHT & SPACE		BENCH: PARTIAL WIDTH, CENTERED
(4) ENTIRE VEHICLE WIDTH				CARGO AREA

EXAMPLES

THE TWO FIGURES BELOW PROVIDE EXAMPLES OF THE OCCUPANT SPACE NUMBER.

PASSENGER CAR
5 PASSENGERS

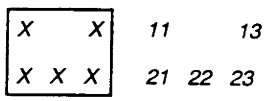

VAN
12 PASSENGER CAPACITY

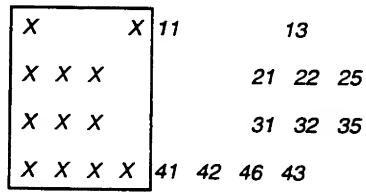

CODES FOR COLUMN F, MEASUREMENT AXIS

(X) X-AXIS *(FORE & AFT)*
(Y) Y-AXIS *(LATERAL)*
(Z) Z-AXIS *(VERTICAL)*

CODES FOR COLUMNS G, H, I & J, OCCUPANT & INJURY NUMBERS

OCCUPANT NUMBER	INJURY NUMBER	CONTACT
(00)	(00)	NO CONTACT
(##)	(00)	CONTACT, NO INJURY
(97)	(99)	CONTACT, OCCUPANT UNKNOWN, INJURY UNKNOWN
(99)	(00) OR (99)	UNKNOWN IF CONTACT

CODES FOR COLUMN C, INTRUDING COMPONENT OR OBJECT

NOTE: DO NOT CODE OBJECTS OTHER THAN COMPONENTS OF CASE VEHICLE.

INDIVIDUAL COMPONENT

INTERNAL

(01) INSTRUMENT PANEL
(02) FIRE WALL
(03) TOE PAN
(04) FLOOR PAN
(05) STEERING COLUMN
(06) WINDSHIELD
(07) WINDSHIELD HEADER
(08) A-PILLAR
(09) DOOR PANEL OR SIDE PANEL
(10) WINDOW FRAME
(11) B-PILLAR
(12) C-PILLAR
(13) D-PILLAR
(14) ROOF SIDE RAILS
(15) ROOF OR CONVERTIBLE TOP
(16) BACKLIGHT HEADER
(17) FRONT SEAT-BACK SURFACE/ SEAT-BACK BACK SURFACE
(18) SECOND SEAT-BACK SURFACE SEAT-BACK BACK SURFACE
(19) THIRD SEAT-BACK SURFACE SEAT-BACK BACK SURFACE
(20) FOURTH SEAT-BACK SURFACE SEAT-BACK BACK SURFACE
(21) FIFTH SEAT-BACK SURFACE SEAT-BACK BACK SURFACE
(22) BACK PANEL/BACK DOOR SURFACE
(23) SEAT CUSHION SURFACE/EDGE
(24) CONSOLE
(25) OTHER *(DESCRIBE)*
(26) UNKNOWN INTERNAL SURFACES
(28) TRANSMISSION TUNNEL (HUMP)
(29) SIDE FOOTWELL PANEL (KICKPANEL)
(30) SILL

EXTERNAL

(43) HOOD
(44) OBJECT EXTERNAL TO PASSENGER COMPARTMENT BUT PART OF CASE VEHICLE
(45) OUTSIDE SURFACE OF CASE VEHICLE
(46) OTHER *(E.G. SPARE TIRE, JACK. DESCRIBE.)*
(49) UNKNOWN EXTERNAL OBJECT

GROUPED FOR MASSIVE INTRUSION INTO AN OCCUPANT SPACE

USE ONLY IF ALL THESE COMPONENTS INTRUDED INTO A SINGLE OCCUPANT SPACE.

(50)WINDSHIELD HEADER
A-PILLAR
ROOF SIDE RAIL

(51)INSTRUMENT PANEL
A-PILLAR
DOOR PANEL

(52)INSTRUMENT PANEL
A-PILLAR
WINDSHIELD HEADER

(53)DOOR PANEL
B-PILLAR
ROOF RAIL

(54)DOOR PANEL
A-PILLAR
ROOF RAIL

(55)INSTRUMENT PANEL
FLOOR PAN
A-PILLAR
DOOR FRAME

(56)ROOF RAIL
A-PILLAR
B-PILLAR
WINDOW FRAME

(57)ROOF RAIL
A-PILLAR
B-PILLAR
C-PILLAR
DOOR PANEL

(58)ROOF
ROOF RAIL
WINDOW FRAME
DOOR PANEL

(59)BACKLIGHT HEADER
ROOF
C-PILLAR
THIRD SEAT-BACK

(60)ROOF
ROOF RAIL
A-PILLAR
B-PILLAR
C-PILLAR
WINDOW FRAME
DOOR PANEL
FLOOR PAN

(61)INSTRUMENT PANEL
TOE PAN
WINDSHIELD HEADER
A-PILLAR
ROOF RAIL
WINDOW FRAME
DOOR PANEL
ROOF

(62)ROOF
ROOF RAIL
C-PILLAR
WINDOW FRAME
FLOOR PAN
SECOND SEAT
DOOR PANEL

(63)ROOF RAIL
ROOF
B-PILLAR
WINDOW FRAME
FLOOR PAN
DOOR PANEL
SECOND SEAT
FRONT SEAT

(64)ROOF RAIL
ROOF OR CONVERTIBLE TOP
A-PILLAR
B-PILLAR
WINDOW FRAME
WINDOW HEADER

(65)WINDSHIELD
WINDSHIELD HEADER
ROOF SIDE RAIL

(66)WINDSHIELD
WINDSHIELD HEADER
A-PILLAR

(98)NOT APPLICABLE

(99)UNKNOWN

Duplicate columns 1-8 from the previous card. Module I (9) T (10) Format 0 (11) 1 (12)

INTRUSION IT-5

WAS THERE OCCUPANT COMPARTMENT INTRUSION? 0 (13)

(0) NO *DO NOT ANSWER NEXT QUESTION. SKIP PAGE.*
(1) YES *ANSWER NEXT QUESTION.*
(9) UNKNOWN *SKIP PAGE.*

WAS INTRUSION CATASTROPHIC? ___ (14)

(0) NO *COMPLETE PAGE.*
(1) YES *SKIP PAGE.*

Duplicate columns 1-8 from the previous card. Module I (9) T (10) Format 0 (11) 2 (12)

NOTE: Each line in the table below is a separate record (card). Duplicate columns 1 - 12 for each completed line.

INTRUSIONS

CODE INTRUSIONS IN THIS ORDER: LEFT TO RIGHT ON ROW; FRONT TO BACK IN VEHICLES.
CODES FOR B, F, G, H, I, J *ON PAGE IT-3*
CODES FOR C *ON PAGE IT-4*

A	B	C	D	E	F	G	H	I	J	K
							OCCUPANT CONTACT AND INJURY			
INTRUSION NUMBER	OCC. SPACE NO.	INTRUDING COMPONENT OR OBJECT	ASSOC. EVENT NO.	MAXIMUM INTRUSION X AXIS (cm)	MAXIMUM INTRUSION Y AXIS (cm)	MAXIMUM INTRUSION Z AXIS (cm)	OCCUPANT NUMBER	INJURY NUMBER	OCCUPANT NUMBER	INJURY NUMBER
13-14	15-16	17-18	19	20-21	22-23	24-25	26-27	28-29	30-31	32-33
0 1	__ __	__ __	__	__ __	__ __	__ __	__ __	__ __	__ __	__ __
0 2	__ __	__ __	__	__ __	__ __	__ __	__ __	__ __	__ __	__ __
0 3	__ __	__ __	__	__ __	__ __	__ __	__ __	__ __	__ __	__ __
0 4	__ __	__ __	__	__ __	__ __	__ __	__ __	__ __	__ __	__ __
0 5	__ __	__ __	__	__ __	__ __	__ __	__ __	__ __	__ __	__ __
0 6	__ __	__ __	__	__ __	__ __	__ __	__ __	__ __	__ __	__ __
0 7	__ __	__ __	__	__ __	__ __	__ __	__ __	__ __	__ __	__ __

NOTE: USE ADDITIONAL PAGE IF MORE THAN 7 INTRUSIONS.

Duplicate columns 1-8 from the previous card. Module I (9) T (10) Format 0 (11) 3 (12)

NOTE: IF NO SIDE DOOR INTRUSION, SKIP REMAINDER OF PAGE.

SIDE DOOR INTRUSION RESULTED FROM

INTRUSION NUMBER	CAUSE
__ __ (13)	__ (15)
__ __ (16)	__ (18)
__ __ (19)	__ (21)

CODES FOR CAUSE:
(1) DIRECT IMPACT
(2) INDUCED DAMAGE
(9) UNKNOWN

IF DAMAGE TO DOOR COMPONENT RESULTED IN INCREASED DOOR INTRUSION, CODE COMPONENT

	INTRUSION NUMBER	DAMAGED COMPONENT 1	DAMAGED COMPONENT 2
A	__ __ (22 23)	__	__ (25)
B	__ __ (26 27)	__	__ (29)
C	__ __ (30 31)	__	__ (33)
D	__ __ (34 35)	__	__ (37)

CODES FOR COMPONENTS
(0) NONE
(1) A-PILLAR
(2) B-PILLAR
(3) C-PILLAR
(4) LATCH/STRIKER
(5) HINGES
(7) OTHER: ____
(8) NOT APPLICABLE
(9) UNKNOWN

Duplicate columns 1-8 from the previous card. Module I (9) T (10) Format 0 (11) 2 (12)

INTRUSION IT-6

NOTE: Each line in the table below is a separate record (card). Duplicate columns 1 - 12 for each completed line.

-- ADDITIONAL PAGE --

INTRUSIONS *CODE INTRUSIONS IN THIS ORDER: LEFT TO RIGHT ON ROW; FRONT TO BACK IN VEHICLES.*
CODES FOR B, F, G, H, I, J *ON PAGE IT-3 -*
CODES FOR C *ON PAGE IT-4*

OCCUPANT CONTACT AND INJURY

A	B	C	D	E	F	G	H	I	J	K
INTRUSION NUMBER	OCC. SPACE NO.	INTRUDING COMPONENT OR OBJECT	ASSOC. EVENT NO.	MAXIMUM INTRUSION X AXIS (cm)	MAXIMUM INTRUSION Y AXIS (cm)	MAXIMUM INTRUSION Z AXIS (cm)	OCCUPANT NUMBER	INJURY NUMBER	OCCUPANT NUMBER	INJURY NUMBER
13-14	15-16	17-18	19	20-21	22-23	24-25	26-27	28-29	30-31	32-33
0 8										
0 9										
1 0										
1 1										
1 2										
1 3										
1 4										
1 5										
1 6										
1 7										
1 8										
1 9										
2 0										
2 1										
2 2										
2 3										
2 4										
2 5										

Duplicate columns 1-8 from the previous card. Module I (9) D (10) Format 0 (11) 1 (12)

INTERIOR DAMAGE ID-1

CODES:

(0) NO
(1) YES
(3) NO, and OCCUPANT CONTACT
(4) YES, and OCCUPANT CONTACT
(8) NOT APPLICABLE
(9) UNKNOWN

SIDES

	LEFT	RIGHT
FRONT DOOR	0 (13)	0 (14)
FRONT HARDWARE	0 (15)	0 (16)
FRONT ARMREST	0 (17)	0 (18)
FRONT GLASS	0 (19)	0 (20)
REAR DOOR AREA	0 (21)	0 (22)
REAR HARDWARE	0 (23)	0 (24)
REAR ARMREST	0 (25)	0 (26)
REAR GLASS	0 (27)	0 (28)
ROOF SIDE RAIL	0 (29)	0 (30)
B-PILLAR	0 (31)	0 (32)
C-PILLAR	0 (33)	0 (34)
D-PILLAR	0 (35)	0 (36)
HEADLINING	0 (37)	0 (38)
ROOF STRUCTURE	0 (39)	0 (40)
T-ROOF/SUN ROOF	0 (41)	0 (42)
OTHER: * _____	8 (43)	8 (44)

FRONT

FOOT CONTROLS	0 (45)
IGNITION KEYS	0 (46)
REAR VIEW MIRROR	0 (47)
SUNVISOR/FITTINGS	0 (48)
(5) LEFT SIDE ONLY (6) RIGHT SIDE ONLY (7) BOTH SIDES	
WINDSHIELD TOP MOLDINGS	0 (49)
LEFT A-PILLAR *(UPPER OR LOWER)*	0 (50)
RIGHT A-PILLAR *(UPPER OR LOWER)*	0 (51)
CENTER CONSOLE	0 (52)
TRANSMISSION SELECTOR LEVER	0 (53)
RIM, HORN, SPOKE	0 (54)

INSTRUMENT PANEL

UPPER PANEL	0 (55)
MID PANEL	0 (56)
LOWER PANEL	3 (57)
ASHTRAY	0 (58)
CONTROL KNOBS & LEVERS	0 (59)
GLOVE COMPARTMENT AREA	0 (60)
INSTRUMENTS	0 (61)
PARKING BRAKE RELEASE	0 (62)
PARKING BRAKE PEDAL	0 (63)
A/C OR UPPER VENT OUTLETS	0 (64)
HEATER OR A/C DUCTS	0 (65)
RADIO	0 (66)
OTHER: * _____	8 (67)

REAR

WINDOW	0 (68)
WINDOW HEADER	0 (69)

CONSOLES

VERTICAL	0 (70)
ROOF	0 (71)

* *MORE THAN ONE ITEM MAY BE NOTED.*

Duplicate columns 1-8 from the previous card. Module S (9) T (10) Format 0 (11) 2 (12)

SEATS — ST-1

FRONT SEAT

	DRIVER	PASSEN'R
TYPE OF FRONT SEAT (00) NO SEAT (01) STANDARD BENCH (02) SPLIT BACK, 50-50 (03) SPLIT BACK, DRIVER WIDE (04) SPLIT BACK, PASS. WIDE (05) BUCKET (06) CAPTAIN'S CHAIR (07) INDIV. BENCH, 50-50 (08) INDIV. BENCH, DRIVER WIDE (09) INDIV. BENCH, PASS. WIDE (97) OTHER: _____ (99) UNKNOWN	05 (13, 14)	05 (15, 16)
TYPE OF SEAT MOUNT (1) STANDARD (2) PEDESTAL (7) OTHER: _____ (8) NOT APPLICABLE (9) UNKNOWN	1 (17)	1 (18)
SWIVEL MECHANISM EQUIPPED (0) NO (1) YES (8) NOT APPLICABLE (9) UNKNOWN	0 (19)	0 (20)
ORIGINAL EQUIPMENT SEATS (0) NO (1) YES (8) NOT APPLICABLE (9) UNKNOWN	1 (21)	1 (22)
CONTACT OF SEAT BY REAR OCCUPANT (0) NO (1) YES (8) NOT APPLICABLE (9) UNKNOWN	8 (23)	8 (24)
FRONT SEAT DAMAGE (0) NONE (1) BACKREST ONLY DAMAGED (2) CUSHION ONLY DAMAGED (3) BACKREST & CUSHION DAMAGED (8) NOT APPLICABLE (9) UNKNOWN	0 (25)	0 (26)
CENTER ARMREST DAMAGED (0) NO (1) YES (7) EQUIPPED, DAMAGE UNKNOWN (8) NOT APPLICABLE *(NO CENTER ARMREST)* (9) UNKNOWN IF EQUIPPED	0 (27)	
FRONT SEAT ROTATION (0) NONE APPARENT (1) FORWARD APPARENT (2) REARWARD APPARENT (3) LEFT APPARENT (4) RIGHT APPARENT (5) MULTIPLE ROTATIONS SPECIFY _____ (8) NOT APPLICABLE (9) UNKNOWN	0 (28)	0 (29)

FRONT SEAT-BACK

	DRIVER	PASSEN'R
SEAT-BACK TYPE (1) FORWARD FOLDING (2) RIGID (3) RECLINING (7) OTHER: _____ (8) NOT APPLICABLE (9) UNKNOWN	3 (30)	3 (31)
SEAT-BACK LOCK TYPE (0) NONE (1) MANUAL (2) INERTIA (3) POWER (7) OTHER: _____ (8) NOT APPLICABLE (9) UNKNOWN	3 (32)	3 (33)
LOCKS HELD (0) NO (1) YES (8) NOT APPLICABLE (9) UNKNOWN	1 (34)	1 (35)
RECLINER MECHANISM HELD (0) NO (1) YES (8) NOT APPLICABLE (9) UNKNOWN	1 (36)	1 (37)

HEAD RESTRAINT

HEAD RESTRAINT TYPE (0) NONE (1) ADJUSTABLE (2) INTEGRAL (3) NOT INTEGRAL, BUT CANNOT BE REMOVED (7) OTHER: _____ (8) NOT APPLICABLE (9) UNKNOWN	1 (38)	1 (39)
REMOVED PRE-CRASH (0) NO (1) YES (8) NOT APPLICABLE (9) UNKNOWN	0 (40)	0 (41)
ADJUSTMENT AT CRASH (1) UP (2) DOWN (8) NOT APPLICABLE (9) UNKNOWN	2 (42)	2 (43)
HEAD RESTRAINT DAMAGE (0) NONE (1) DAMAGED BUT NOT SEPARATED (2) SEPARATED (8) NOT APPLICABLE (9) UNKNOWN	0 (44)	0 (45)

FRONT SEAT ADJUSTMENT

	DRIVER	PASSEN'R
SEAT ADJUSTMENT TYPE (0) NONE *(RIGID)* (1) MANUAL (2) POWER (7) OTHER: _____ (8) NOT APPLICABLE *(NO SEAT)* (9) UNKNOWN	2 (46)	2 (47)
ADJUSTMENT PROVIDED (1) 2-WAY (2) 4-WAY (3) 6-WAY (7) OTHER: 8-way (8) NOT APPLICABLE (9) UNKNOWN	7 (48)	7 (49)
SEAT ADJUSTER DAMAGE (0) NONE (1) CHUCKING *(FREE PLAY)* (2) DEFORMED *(RELEASED/JAMMED)* (3) SEPARATED (7) OTHER: _____ (8) NOT APPLICABLE (9) UNKNOWN	0 (50)	0 (51)
SEAT ADJUSTER SEPARATION (0) NONE (1) SEPARATED AT FLOOR (2) SEPARATION OF ADJUSTER (3) SEPARATED AT SEAT (8) NOT APPLICABLE (9) UNKNOWN	8 (52)	8 (53)
PRE-CRASH POSITION (1) FORWARD (2) MIDDLE (3) REARWARD (8) NOT APPLICABLE (9) UNKNOWN	1 (54)	3 (55)

SECOND SEAT

	LEFT	RIGHT
TYPE OF SECOND SEAT (0) NONE (1) NON-FOLDING (2) FOLDING (3) CAPTAIN'S CHAIR (4) JUMP SEAT (5) INTEGRAL CHILD SEAT (6) LUGGAGE AREA ACCESS PANEL (9) UNKNOWN	1 (56)	1 (57)
SECOND SEAT DAMAGE (0) NONE (1) BACKREST ONLY *(DAMAGED OR LOOSENED)* (2) CUSHION ONLY *(DAMAGED OR LOOSENED)* (3) BACKREST & CUSHION *(DAMAGED OR LOOSENED)* (4) INTEGRAL CHILD SEAT *(PRIORITY CODE)* (5) LUGGAGE AREA ACCESS PANEL *(DAMAGED OR LOOSENED)* (8) NOT APPLICABLE (9) UNKNOWN	0 (58)	0 (59)

SECOND SEAT (CONT.)

CENTER ARMREST DAMAGED (0) NO (1) YES (7) EQUIPPED, DAMAGE UNKNOWN (8) NOT APPLICABLE *(NO CENTER ARMREST)* (9) UNKNOWN IF EQUIPPED	0 (60)

SECOND SEAT-BACK LOCKS

FOR THE FOLLOWING, USE:

(0) NO
(1) YES
(8) NOT APPLICABLE
(9) UNKNOWN

	LEFT	RIGHT
LEFT OR CENTER, EQUIPPED	8 (61)	8 (62)
LEFT OR CENTER, HELD (3) SEAT FOLDED DOWN	8 (63)	8 (64)
RIGHT, EQUIPPED	8 (65)	8 (66)
RIGHT, HELD (3) SEAT FOLDED DOWN	8 (67)	8 (68)

THIRD SEAT

EQUIPPED	0 (69)	0 (70)
BACKREST DAMAGED	8 (71)	8 (72)
CUSHION DAMAGED	8 (73)	8 (74)

VEHICLE EQUIPPED WITH REAR HEAD RESTRAINTS

(0) NOT EQUIPPED *(OR REMOVED)*
(1) EQUIPPED
(2) EQUIPPED & DAMAGED
(8) NOT APPLICABLE *(NO REAR SEAT)*
(9) UNKNOWN

Applies to any rear-seat position

1 (75)

Duplicate columns 1-8 from the previous card. Module A (9) B (10) Format 0 (11) 1 (12)

AIRBAG AB-1

DRIVER SIDE

LOCATION OF AIRBAG
STEERING WHEEL

EQUIPPED

(0) NO
(1) YES
(4) PRIOR DEPLOYMENT NOT REINSTALLED
(9) UNKNOWN IF AIRBAG EQUIPPED

13: 1

DEPLOYED

(0) NO
(1) YES
(2) PARTIAL/IMPROPER DEPLOYMENT
(8) NOT APPLICABLE *(NO AIRBAG)*
(9) UNKNOWN

14: 1

PASSENGER SIDE

LOCATION OF AIRBAG
INSTRUMENT PANEL (GLOVE BOX)

EQUIPPED

(0) NO
(1) YES
(4) PRIOR DEPLOYMENT NOT REINSTALLED
(9) UNKNOWN IF AIRBAG EQUIPPED

16: 1

DEPLOYED

(0) NO
(1) YES
(2) PARTIAL/IMPROPER DEPLOYMENT
(8) NOT APPLICABLE *(NO AIRBAG)*
(9) UNKNOWN

17: 1

CONDITION OF AIRBAG
STEERING WHEEL

(0) NO DAMAGE
(2) SPLIT OR TORN
(3) CUT DURING CRASH
(4) BURNED/MELTED
(5) CUT POST CRASH
(6) OTHER _____
(7) DAMAGED, CONDITION UNKNOWN
(8) NOT APPLICABLE *(NOT EQUIPPED/NOT DEPLOYED)*
(9) UNKNOWN IF EQUIPPED OR CONDITION

15: 0

CONDITION OF AIRBAG
INSTRUMENT PANEL (GLOVE BOX)

(0) NO DAMAGE
(2) SPLIT OR TORN
(3) CUT DURING CRASH
(4) BURNED/MELTED
(5) CUT POST CRASH
(6) OTHER _____
(7) DAMAGED, CONDITION UNKNOWN
(8) NOT APPLICABLE *(NOT EQUIPPED/NOT DEPLOYED)*
(9) UNKNOWN IF EQUIPPED OR CONDITION

18: 0

DRIVER SIDE

AIRBAG
STEERING WHEEL

TETHER

(0) NO
(1) YES
(6) OTHER
(7) UNKNOWN IF TETHERED
(8) NOT APPLICABLE *(NO AIRBAG)*
(9) UNKNOWN IF AIRBAG EQUIPPED

19: 1

MARKED BY CONTACT

(0) NO
(1) YES
(8) NOT APPLICABLE *(NO AIRBAG)*
(9) UNKNOWN

20: 0

PASSENGER SIDE

AIRBAG
INSTRUMENT PANEL (GLOVE BOX)

TETHER

(0) NO
(1) YES
(6) OTHER _____
(7) UNKNOWN IF TETHERED
(8) NOT APPLICABLE *(NO AIRBAG)*
(9) UNKNOWN IF AIRBAG EQUIPPED

21: 1

MARKED BY CONTACT

(0) NO
(1) YES
(8) NOT APPLICABLE *(NO AIRBAG)*
(9) UNKNOWN

22: 0

AIRBAG NUMBER ON DRIVER SIDE:

2 VENTS @
10 & 2

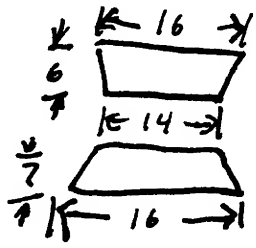

NOTE AND DESCRIBE ANY AIRBAG CONTACT OR DAMAGE ON DIAGRAM BELOW:

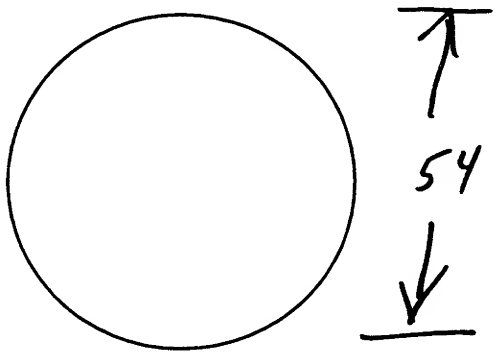

AIRBAG NUMBER ON PASSENGER SIDE:

2 VENTS @ 3 & 9
ON SIDES
1 FLAP
27 W
6 T

NOTE AND DESCRIBE ANY AIRBAG CONTACT OR DAMAGE ON DIAGRAM BELOW:

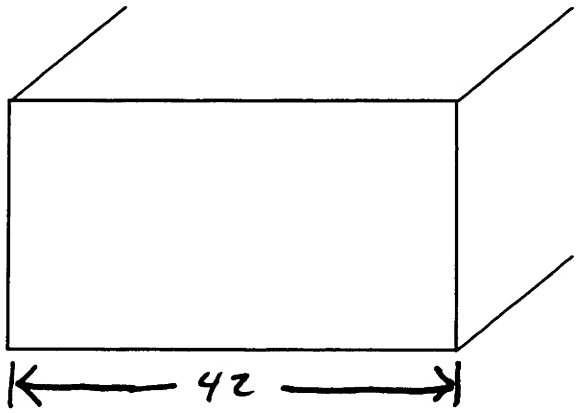

NOTE TO THE INVESTIGATOR:

THE FOLLOWING TWO SECTIONS,
OCCUPANT INFORMATION *AND* INJURY CLASSIFICATION,
ARE TO BE FILLED IN
FOR EACH CASE VEHICLE OCCUPANT,
WHETHER INJURED OR NOT.

IF THERE IS MORE THAN ONE OCCUPANT,
USE ADDITIONAL COPIES
OF PAGES OC-1, OC-2, OC-3,
AND IC-2 *TO DESCRIBE THEM*
AND ATTACH THE COPIES TO THIS REPORT.

Duplicate columns 1-8 from the previous card. Module O (9) C (10) Format 0 (11) 2 (12)

OCCUPANT INFORMATION OC-1

OCCUPANT IDENTIFICATION

OCCUPANT NUMBER — 0 (13) 1 (14)

ROLE OF OCCUPANT AT 1ST IMPACT — 1 (15)

(1) MOTOR VEHICLE DRIVER
(2) MOTOR VEHICLE PASSENGER *(NOT DRIVER)*
(9) UNKNOWN

OCCUPANT POSITION

ROW LOCATION — 1 (16)

(1) FRONT
(2) SECOND
(3) THIRD
(4) FOURTH
(7) OTHER: _____
(8) EXTERNAL TO PASSENGER COMPARTMENT *(E.G. BED OF PICKUP)*
(9) UNKNOWN

LATERAL LOCATION — 1 (17)

(1) LEFT
(2) LEFT CENTER
(3) CENTER
(4) RIGHT CENTER
(5) RIGHT
(6) ALL *(LYING ON SEAT)*
(8) EXTERNAL TO PASSENGER COMPARTMENT
(9) UNKNOWN

POSTURE — 1 (18) 0 (19)

(10) SITTING ON SEAT
(11) SITTING ON SEAT IN ABNORMAL POSITION *(E.G. FEET ON DASH, SIDEWAYS)*
(12) SITTING ON CONSOLE
(20) ON LAP OR IN ARMS
(30) STANDING ON SEAT
(40) STANDING ON FLOOR
(47) STANDING, EXTERNAL TO PASSENGER COMPARTMENT
(50) IN BASSINET
(60) IN CHILD SEAT
(65) IN CHILD HARNESS
(70) LYING ON SEAT
(80) LYING/SITTING ON PASSENGER FLOOR
(83) LYING/SITTING ON OTHER OBJECT IN PASSENGER COMPARTMENT: _____
(85) ON CARGO FLOOR/FOLDED SEAT-BACK
(87) LYING/SITTING, EXTERNAL TO PASSENGER COMPARTMENT
(97) OTHER: _____
(99) UNKNOWN

PHYSICAL DESCRIPTION

AGE IN YEARS — 3 (20) 4 (21)

(00) LESS THAN 1 YEAR
(98) 98 YEARS OR OLDER
(99) UNKNOWN

AGE IN MONTHS — 2 (22) 5 (23)

(00) LESS THAN 1 MONTH
(25) 25 MONTHS OR OLDER
(99) UNKNOWN

MASS *(kg)* — 0 (24) 7 (25) 3 (26)

(999) UNKNOWN (160 lb)

HEIGHT *(cm)* — 1 (27) 7 (28) 8 (29)

(999) UNKNOWN (5 ft 10 in)

SEX — 1 (30)

(1) MALE
(2) FEMALE
(9) UNKNOWN

MEDICAL CONDITIONS

TREATMENT/MORTALITY — 0 (31) 2 (32)

(00) NONE
(01) FIRST AID AT SCENE
(02) TREATED AT HOSPITAL/CLINIC BUT NOT ADMITTED
(03) HOSPITALIZED FOR OBSERVATION LESS THAN 24 HOURS
(04) HOSPITALIZED OVER 24 HOURS OR FOR SIGNIFICANT TREATMENT
(05) FATAL, DEAD AT SCENE
(06) FATAL, DOA
(07) FATAL, DEAD WITHIN 24 HOURS
(08) FATAL, DEAD 24 HOURS TO 31 DAYS LATER
(09) FATAL, DEAD 31 DAYS TO 1 YEAR LATER
(10) FATAL DEAD WITHIN UNKNOWN PERIOD
(99) UNKNOWN

INJURY SEVERITY SCORE *(ISS)* — 0 (33) 1 (34)

(99) UNKNOWN

NON-IMPACT MED. CONDITIONS — 0 (35)

(0) NONE
(1) YES, TIME & TYPE UNKNOWN
(2) PRE-CRASH FATAL *(CLINICAL DEATH AT WHEEL)*
(3) PRE-CRASH NON-FATAL *(E.G. PRIOR INJURY, STROKE)*
(4) PREGNANT
(5) POST-CRASH FATAL *(DROWNING)*
(6) POST-CRASH NON-FATAL INJURY
(7) OTHER: _____
(8) COMBINATION OF ABOVE *(CIRCLE EACH)*
(9) UNKNOWN

MEDICAL CONDITIONS (CONT.)

POLICE INJURY SEVERITY CODE FOR THIS OCCUPANT

(0) O - NO INJURY
(1) C - POSSIBLE INJURY
(2) B - NON-INCAPACITATING
(3) A - INCAPACITATING INJURY
(4) K - FATAL
(5) INJURED, SEVERITY UNKNOWN
(6) DIED PRIOR TO IMPACT
(7) NON-FATAL INJURY, SEVERITY UNKNOWN
(9) UNKNOWN

1 (36)

RESTRAINT SYSTEM

ACTIVE RESTRAINT SYSTEM

(0) NONE
(1) LAP BELT
(2) SHOULDER HARNESS ONLY
(3) BOTH LAP BELT & SHOULDER HARNESS
(9) UNKNOWN

3 (37)

ACTIVE RESTRAINT SYSTEM USAGE

(0) NONE *(AVAILABLE BUT NOT USED)*
(1) LAP BELT ONLY
(2) SHOULDER HARNESS ONLY
(3) BOTH LAP BELT & SHOULDER HARNESS
(7) IMPROPER USAGE
(8) NOT APPLICABLE *(NONE AVAILABLE)*
(9) UNKNOWN

3 (38)

PASSIVE RESTRAINT SYSTEM

(0) NONE
(1) AIRBAG INSTALLED
(2) PASSIVE UPPER TORSO WITH KNEE BOLSTERS
(3) PASSIVE UPPER TORSO WITHOUT KNEE BOLSTERS
(4) PASSIVE LAP & UPPER TORSO
(5) AIRBAG INSTALLED & PASSIVE RESTRAINT
(7) OTHER: _____
(9) UNKNOWN

1 (39)

PASSIVE RESTRAINT SYSTEM USAGE

(0) SYSTEM DEFEATED
(1) AIRBAG NOT DEPLOYED
(2) AIRBAG DEPLOYED
(3) AIRBAG NOT REINSTALLED
(4) PASSIVE UPPER TORSO USED
(5) PASSIVE LAP & UPPER TORSO USED
(6) SYSTEM USED IN MANUAL MODE
(7) IMPROPER USAGE
(8) NOT APPLICABLE *(NOT ORIGINALLY EQUIPPED)*
(9) UNKNOWN

2 (40)

CHILD SEAT TYPE

(00) NONE USED
(01) YES, USED
(02) INTEGRAL, Chrysler Mini-van
(88) NOT APPLICABLE *(ADULT OR OLDER CHILD)*
(99) UNKNOWN

8 (41) 8 (42)

CHILD SEAT MAKE/MODEL

_____

_____

_____

EJECTION

DEGREE OF EJECTION

(0) NONE
(1) PARTIAL
(2) COMPLETE
(7) EJECTED, DEGREE UNKNOWN
(9) UNKNOWN IF EJECTED

0 (43)

AREA OF EJECTION

(01) WINDOW, LEFT SIDE
(02) WINDOW, RIGHT SIDE
(03) WINDOW, REAR
(04) DOOR, LEFT SIDE
(05) DOOR, RIGHT SIDE
(06) DOOR, REAR OR TAILGATE
(07) WINDSHIELD
(08) ROOF OR OPEN CONVERTIBLE OR FROM EXTERNAL AREA
(96) EJECTED AREA UNKNOWN
(97) OTHER AREA: _____
(98) NOT APPLICABLE *(NOT EJECTED)*
(99) UNKNOWN IF EJECTED

9 (44) 8 (45)

IF OCCUPANT WAS EJECTED, DESCRIBE IN DETAIL BELOW:

_____

_____

_____

_____

HEAD RESTRAINT

HEAD RESTRAINT AVAILABLE FOR THIS POSITION

(0) NOT EQUIPPED OR REMOVED
(1) EQUIPPED
(9) UNKNOWN

1 (46)

OCCUPANT EYEWEAR		SOURCE OF INFORMATION	
(0) NONE (1) GLASSES (2) CONTACTS (3) BOTH GLASSES AND CONTACTS (4) OTHER _____ (8) NOT APPLICABLE (9) UNKNOWN	9 47	(0) INTERVIEW (1) HOSPITAL (2) AUTOPSY (3) POLICE (4) OTHER _____ (5) LAY CORONER/EXTERNAL EXAM (7) COMBINATION OF ABOVE (CIRCLE) (8) NOT APPLICABLE (9) UNKNOWN	1 48

INDICATE LOCATION OF INJURIES.

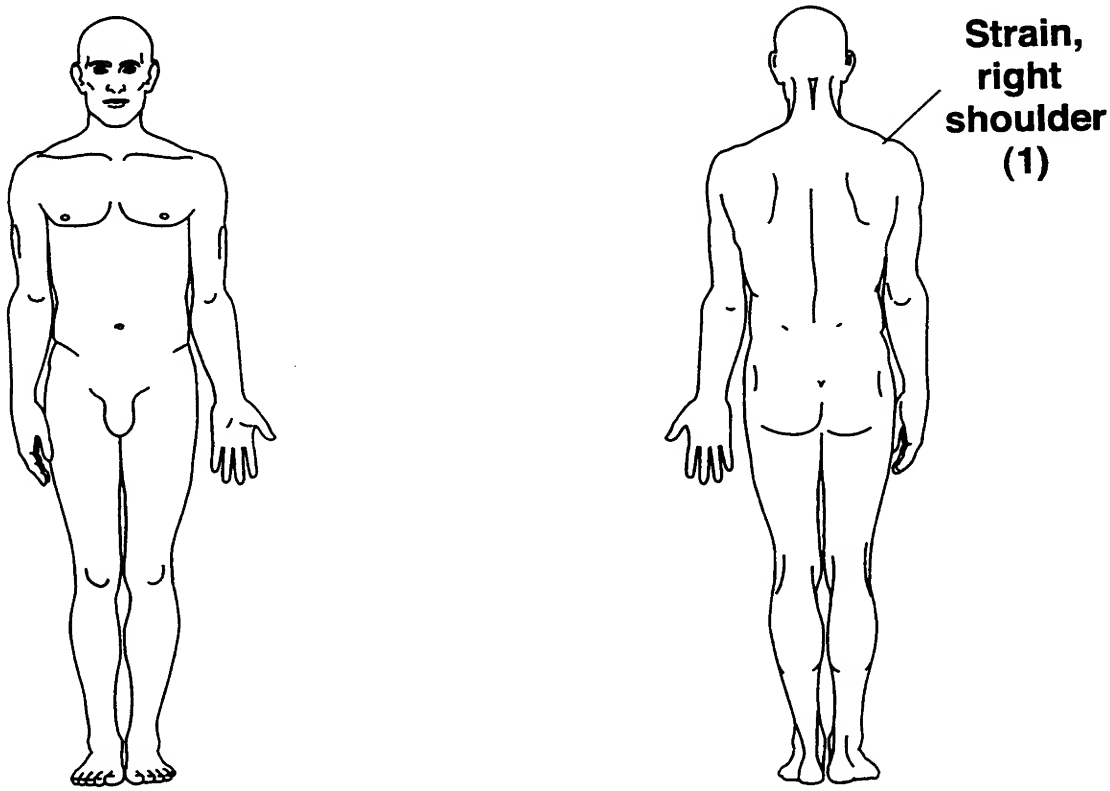

Duplicate columns 1-8 from the previous card. Module I (9) C (10) Format 0 (11) 1 (12)

INJURY CLASSIFICATION IC-1

NOTE: Each line in the table below is a separate record (card). Duplicate columns 1 - 12 for each completed line.

OCCUPANT INJURY CLASSIFICATION

					PRIMARY OIC					ASSOCIATED OIC					COMMENTS
OCCUPANT NUMBER	INJURY NUMBER	PLACE CONTACTS IN ORDER OF PROBABILITY (HORIZONTALLY). START WITH MOST PROBABLE IN 1ST CONTACT AREA COLUMN. AREA(S) OF POSSIBLE CONTACT 1ST	2ND		BODY REGION 1	ASPECT 2	LESION 3	SYSTEM/ORGAN 4	SEVERITY 5	BODY REGION 1	ASPECT 2	LESION 3	SYSTEM/ORGAN 4	SEVERITY 5	
13-14	15-16	17-18	19-20	COMMENTS	21	22	23	24	25	26	27	28	29	30	
01	01	87			S	R	T	M	1						

Duplicate "Occupant Number" for each line.

NOTE: USE ADDITIONAL PAGES IF NECESSARY.

CODES FOR AREAS OF POSSIBLE OCCUPANT CONTACT

FRONT OF PASSENGER COMPARTMENT

(10) SUNVISOR, FITTING*(S)* &/OR TOP MOLDING
(12) WINDSHIELD

(05) INSTRUMENT PANEL *(SPECIFIC AREA UNKNOWN)*
(54) UPPER INSTRUMENT PANEL *(X)*
(55) MIDDLE INSTRUMENT PANEL *(Y)*
(56) LOWER INSTRUMENT PANEL *(Z)*
(81) ASH TRAY *(INSTRUMENT PANEL)*
(02) GLOVE COMPARTMENT AREA
(47) AIRBAG *(ACRS)* COMPARTMENT DOOR/COVER

(57) BENEATH INSTRUMENT PANEL
(53) PARCEL TRAY
(48) KNEE RESTRAINT
(86) VERTICAL CONSOLE

(28) FOOT CONTROLS *(INCL. PARKING BRAKE PEDAL)*

(09) STEERING ASSEMBLY *(SPECIFIC AREA UNKNOWN)*
(65) STEERING WHEEL
(66) STEERING WHEEL COLUMN
(59) TRANSMISSION LEVER ON COLUMN

(03) HARDWARE ITEM *(SPECIFIC AREA UNKNOWN)*
(82) INSTRUMENT*(S)*
(83) CONTROL KNOB*(S)* & LEVER*(S) (FRONT)*
(84) PARKING BRAKE HANDLE IN FRONT
(67) IGNITION KEY
(06) MIRROR
(04) HEATER OR AIR CONDITIONING DUCTS
(01) AIR CONDITIONING OR VENTILATION OUTLET*(S)*
(08) RADIO *(BUILT IN)*
(58) ADD-ON TAPE DECK, RADIO, A/C
(68) ROOF MOUNTED CONTROLS/CONSOLES

REAR

(88) SURFACE OF REAR INTERIOR
(23) REAR WINDOW
(39) REAR WINDOW HEADER
(50) REAR SEAT CUSHION & BACK

INTERIOR-GENERAL

(11) TRANSMISSION SELECTION LEVER *(LOCATION UNK.)*
(59) TRANSMISSION LEVER ON STEERING COLUMN
(44) TRANSMISSION LEVER ON FLOOR OR CONSOLE
(07) PARKING BRAKE HANDLE *(LOCATION UNKNOWN)*
(84) PARKING BRAKE HANDLE IN FRONT
(85) PARKING BRAKE HANDLE ON FLOOR OR CONSOLE
(28) FOOT CONTROLS *(INCL. PARKING BRAKE PEDAL)*

(29) FRONT SEAT-BACK*(S)*
(51) FRONT SEAT CUSHION
(50) REAR SEAT CUSHION & BACK
(49) ARMREST ON SEAT
(89) UNDER SEAT BOTTOM

(33) RESTRAINT SYSTEM HARDWARE
(34) RESTRAINT SYSTEM WEBBING
(87) AIR CUSHION SKIN *(AIRBAG)*
(47) AIRBAG *(ACRS)* COMPARTMENT DOOR/COVER
(46) AIRBAG GAS
(48) KNEE RESTRAINT
(30) HEAD RESTRAINT
(42) CHILD SEAT RESTRAINTS
(43) CHILD SEAT
(31) INTERIOR LOOSE OBJECT
(32) OTHER OCCUPANT*(S)*
(52) INTERNAL FLYING GLASS *(FROM ANY SOURCE)*
(41) UNKNOWN INTERIOR SURFACE

SIDES

(20) SURFACE OF SIDE INTERIOR
(19) HARDWARE ON SIDE OR DOOR
(13) ARMREST ON SIDE OR DOOR
(24) COAT HOOK

(22) WINDOW GLASS *(SIDE)*
(21) WINDOW FRAMES *(SIDE)*

(26) ROOF SIDE RAIL
(14) A-PILLAR
(15) B-PILLAR
(16) C-PILLAR
(17) D-PILLAR

FLOOR

(40) FLOOR
(27) CONSOLE ON FLOOR OR BETWEEN SEATS
(44) TRANSMISSION LEVER ON FLOOR OR CONSOLE
(85) PARKING BRAKE HANDLE ON FLOOR OR CONSOLE
(28) FOOT CONTROLS *(INCL. PARKING BRAKE PEDAL)*
(91) KICKPANEL

ROOF

(25) ROOF OR CONVERTIBLE TOP
(10) SUNVISOR, FITTING*(S)* &/OR TOP MOLDING
(26) ROOF SIDE RAIL
(24) COAT HOOK
(18) DOME LIGHT
(39) BACKLIGHT HEADER
(68) ROOF MOUNTED CONTROLS/CONSOLE
(69) ROLL BAR

EXTERIOR SURFACE OF CASE VEHICLE

(37) OUTSIDE SURFACE OF CASE VEHICLE *(SPECIFIC AREA UNKNOWN)*
(35) HOOD OF CASE VEHICLE
(60) EXTERIOR OF CASE VEHICLE *(E.G. OUTSIDE MIRRORS, ANTENNA, TRIM)*
(62) EXTERIOR SIDE ROOF RAIL OF CASE VEHICLE
(63) TRUNK LID OF CASE VEHICLE
(64) TIRES OF CASE VEHICLE

BEYOND CASE VEHICLE BOUNDARY

(36) AREA EXTERIOR TO CAR *(SPECIFIC AREA UNK.)*
(70) HOOD OF OTHER VEHICLE
(71) OTHER VEHICLE EXTERIOR HARDWARE *(E.G. OUTSIDE MIRRORS, ANTENNA, TRIM)*
(73) EXTERIOR SIDE ROOF RAIL OF OTHER VEHICLE
(74) HEADLIGHT OR FRONT GRILL OF OTHER VEH.
(75) TRUNK OF OTHER VEHICLE
(76) OUTSIDE SURFACE OF OTHER VEHICLE
(77) TIRES OF OTHER VEHICLE
(78) GROUND
(79) WATER
(80) EXTERIOR OBJECT *(NOT VEHICLE, GROUND, OR WATER. PLEASE DESCRIBE.)*

PENETRATING OBJECTS

(61) OTHER VEHICLE
(72) OBJECTS *(DESCRIBE)*

MISCELLANEOUS

(00) NO CONTACT *(INVALID FIELD FORM CODE)*
(38) OTHER *(E.G. FIRE. DESCRIBE)*
(90) SPARE TIRE
(96) INDUCED
(97) EJECTED, UNKNOWN CONTACT
(98) IMPACT FORCE, "WHIPLASH", HYPEREXTENSION/COMPRESSION
(99) UNKNOWN AREA OF CONTACT

THE FIGURE BELOW
IS AN EXPLANATION OF THE BODY REGION CODES
LISTED ON PAGE IC - 4.

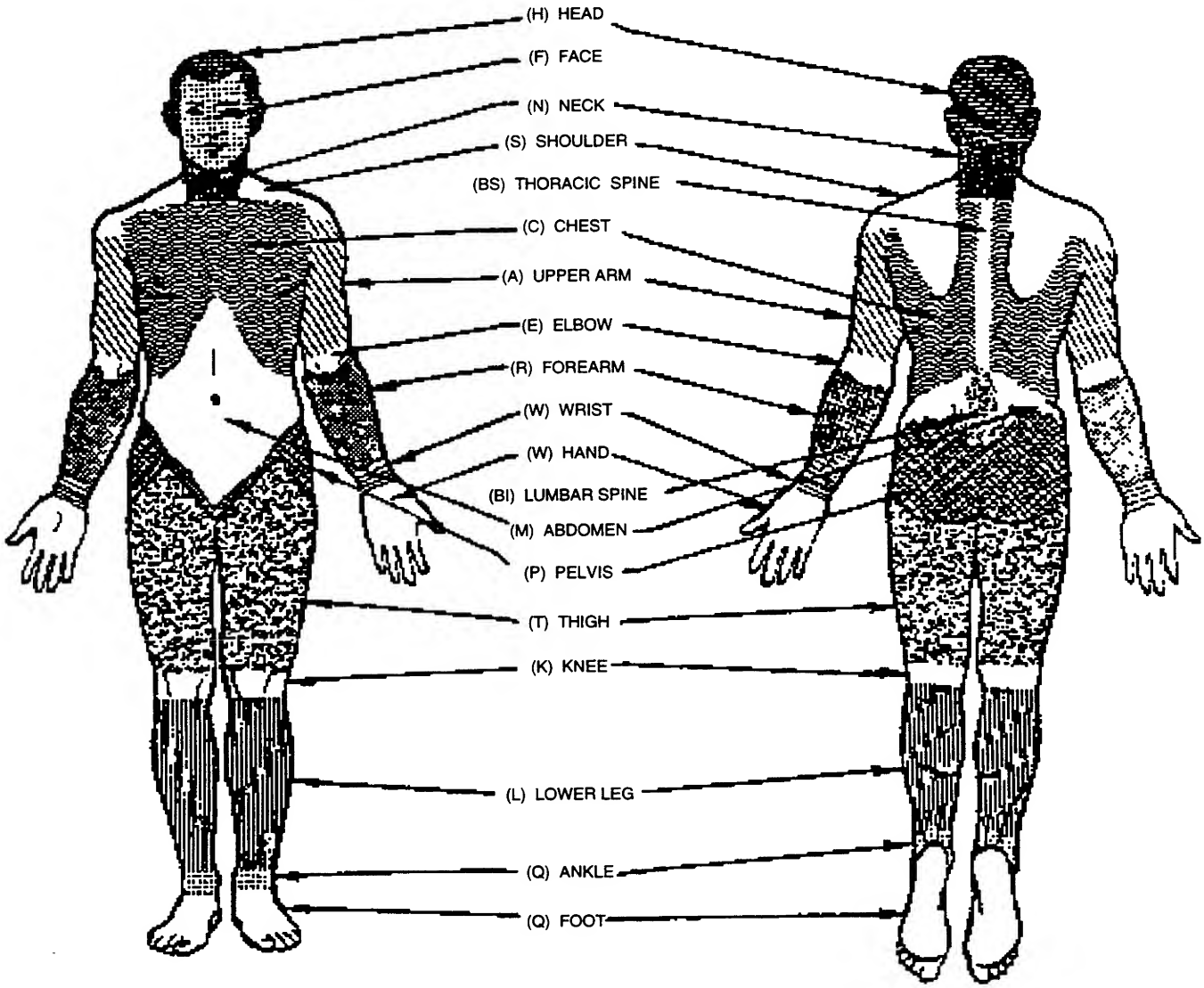

CODES FOR OCCUPANT INJURY CLASSIFICATION (OIC)

1 BODY REGION

(H) HEAD/SKULL
(F) FACE
(N) NECK
(S) SHOULDER
(X) UPPER EXTREMITIES
(A) ARM *(UPPER)*
(E) ELBOW
(R) FOREARM
(W) WRIST/HAND
(C) CHEST
(M) ABDOMEN
(B) BACK
(P) PELVIC/HIP
(Y) LOWER EXTREMITIES
(T) THIGH
(K) KNEE
(L) LEG *(LOWER)*
(Q) ANKLE/FOOT
(O) WHOLE BODY
(U) UNKNOWN

3 LESION

(L) LACERATION
(C) CONTUSION
(A) ABRASION
(F) FRACTURE
(P) PERFORATION, PUNCTURE
(K) CONCUSSION
(V) AVULSION
(R) RUPTURE
(S) SPRAIN
(D) DISLOCATION
(N) CRUSH
(M) AMPUTATION
(B) BURN
(G) DETACHMENT, SEPARATION
(Z) FRACTURE AND DISLOCATION
(T) STRAIN
(E) TOTAL SEVERANCE, TRANSECTION
(O) OTHER
(U) UNKNOWN

4 SYSTEM/ORGAN

(S) SKELETAL
(V) VERTEBRAE
(J) JOINTS
(D) DIGESTIVE
(L) LIVER
(N) NERVOUS SYSTEM
(B) BRAIN
(C) SPINAL CORD
(E) EARS
(O) EYES
(A) ARTERIES
(H) HEART
(Q) SPLEEN
(G) UROGENITAL
(K) KIDNEYS
(R) RESPIRATORY
(P) PULMONARY/LUNGS
(M) MUSCLES
(T) THYROID, OTHER ENDOCRINE GLAND
(I) INTEGUMENTARY *(SKIN)*
(W) ALL SYSTEMS IN REGION
(U) UNKNOWN

2 ASPECT

(R) RIGHT
(L) LEFT
(B) BILATERAL
(C) CENTRAL
(A) ANTERIOR/FRONT
(P) POSTERIOR/BACK
(S) SUPERIOR/UPPER
(I) INFERIOR/LOWER
(W) WHOLE REGION
(U) UNKNOWN

BODY REGION	ASPECT	LESION	SYSTEM/ORGAN	SEVERITY
1	2	3	4	5

5 SEVERITY
(OR "AIS", ABBREVIATED INJURY SCALE)

(0) NONE
(1) MINOR
(2) MODERATE
(3) SERIOUS
(4) SEVERE
(5) CRITICAL
(6) MAXIMUM
(9) UNKNOWN

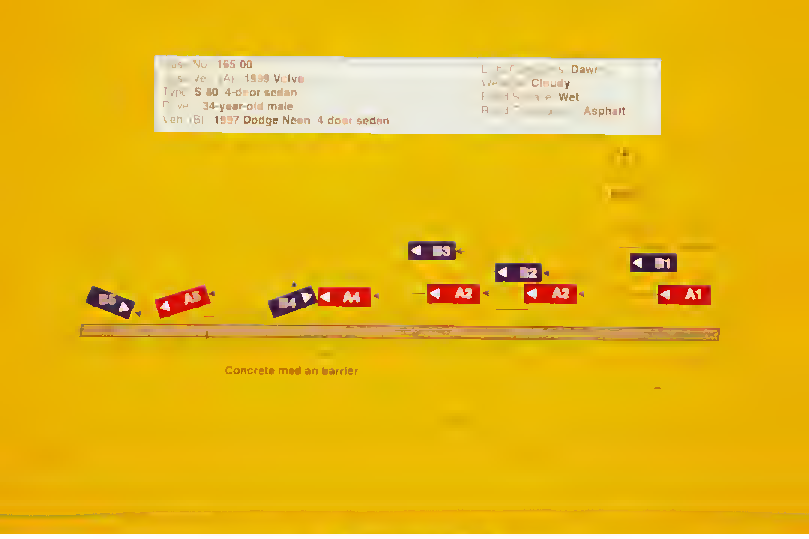
Case No. 165 00
Type S 80 4-door sedan
34-year-old male
1997 Dodge Neon 4 door sedan
Dawn
Cloudy
Wet
Asphalt
B5
A5
B4
A4
B3
A2
B2
A2
B1
A1
Concrete median barrier

PN 16500 #1

PN 16500 #2

PN 16500 #3
Best Available

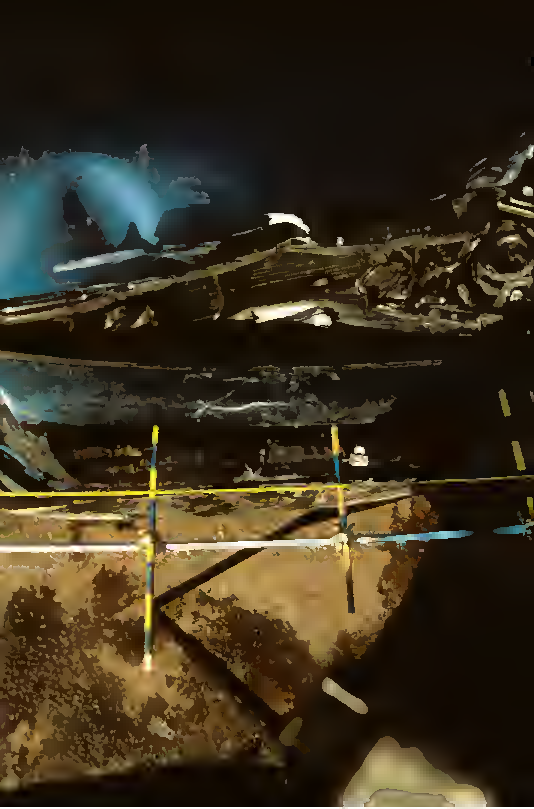

PN 16500 #4
Best Available

PN 16500 #5

PN 16500 #6
Best Available

PN 16500 #7
Best Available

PN 16500 #8
Best Available

PN 16500 #9
Best Available

PN 16500 #10

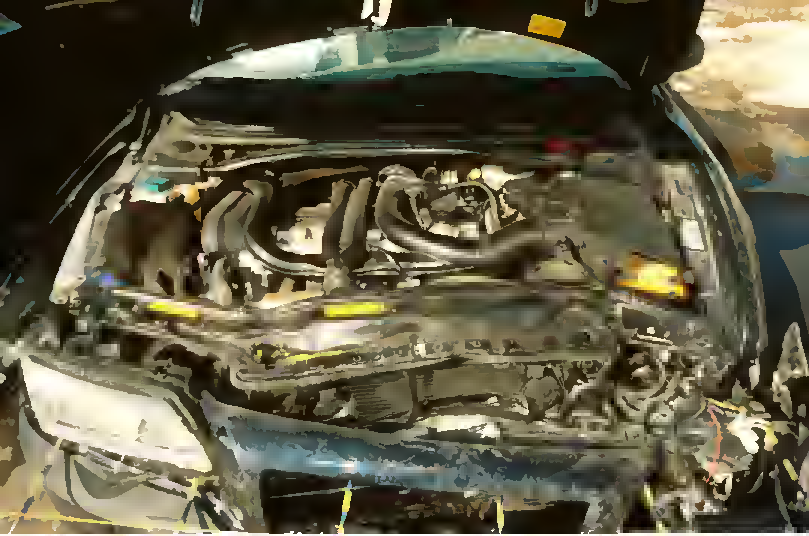

PN 16500 #11

PN 16500 #12

PN 16500 #13
Best Available

PN 16500 #14
Best Available

PN 16500 #15
Best Available

PN 16500 #16

PN 16500 #17

PN 16500 #18

PN 16500 #19

PN 16500 #20
Best Available

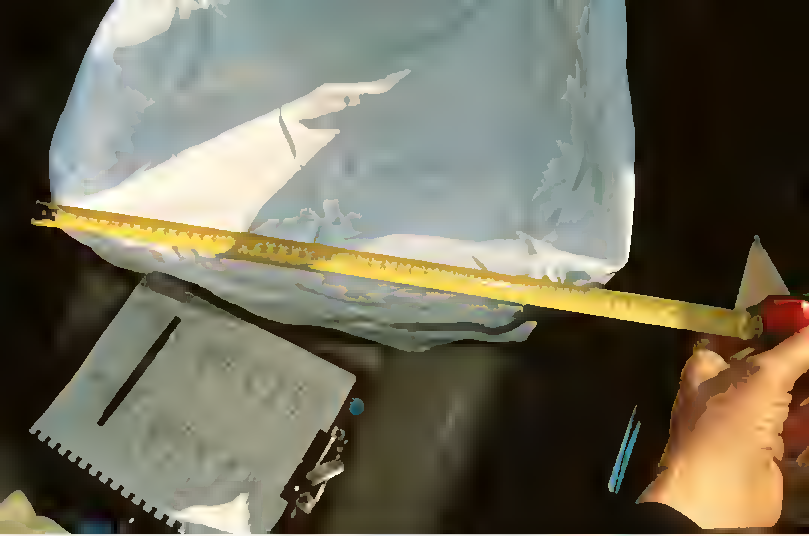

PN 16500 #21

PN 16500 #22

PN 16500 #23

PN 16500 #24

PN 16500 #25

PN 16500 #26

PN 16500 #27

PN 16500 #28

PN 16500 #29

PN 16500 #30

PN 16500 #31

PN 16500 #32

PN 16500 #33

PN 16500 #34

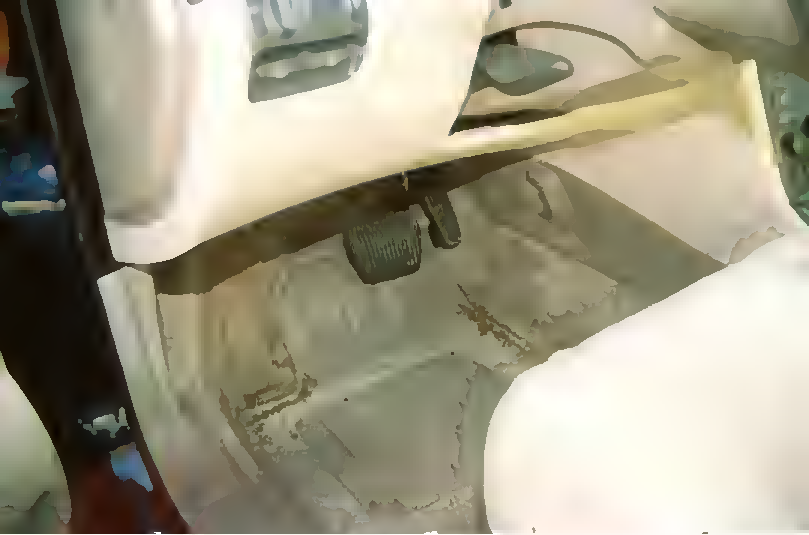

PN 16500 #35

PN 16500 #36

PN 16500 #37

PN 16500 #38

PN 16500 #39

PN 16500 #40

PN 16500 #41

PN 16500 #42

PN 16500 #43

PN 16500 #44

PN 16500 #45

PN 16500 #46

PN 16500 #47